SPECULATIVE BUILDING NO. 5
SOUTHERN KENTUCKY BUSINESS PARK

FOR

SOUTHEAST KENTUCKY
INDUSTRIAL DEVELOPMENT AUTHORITY, INC.

CORBIN, KENTUCKY

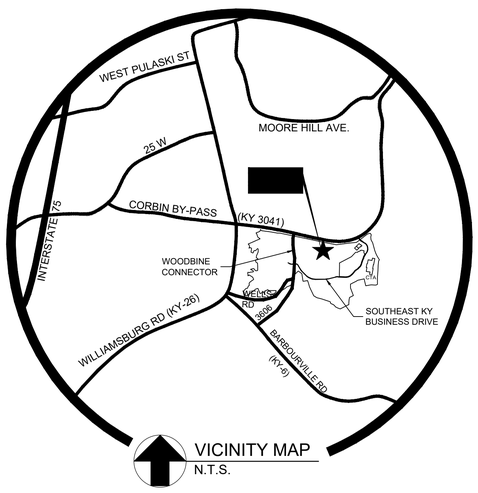

VICINITY MAP
N.T.S.

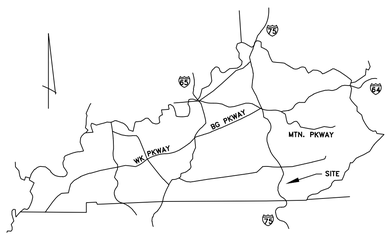

MSE OF KENTUCKY, INC.
Engineers
Architects
Planners

624 Wellington Way
Lexington, KY 40503
www.mselex.com

Phone: (859)223-5694
Fax: (859)223-2607

CODE INFORMATION
2018 KBC 3rd Edition
Project Address: 2891 KY-3041
Corbin Bypass, Corbin, KY 40701, Knox Co.
Use Group: F-2
Construction Type: Type IIB
Speculative (Shell) Building
Section 507.3 Nonsprinklered, one story unlimited area.
Shell Area: 101,197 SF
Eave Ht: 30' nominal
Pre-Engineered Metal Building

DATE:AUGUST 2023

SCHEDULE OF DRAWINGS

SURVEY REFERENCE.....SS1
EROSION CONTROL DETAILS.....EC-1
BUILDING PAD GRADING PLAN.....C-1

GENERAL NOTES.....F0.0
FOUNDATION PLAN.....F1.1
FOUNDATION DETAILS.....F2.1
ENLARGED OFFICE DETAILS.....F2.2

FLOOR PLAN.....A-1
EXTERIOR ELEVATIONS.....A-2
ENLARGED ENTRANCE.....A-3
WALL SECTIONS.....A-4
WALL SECTIONS.....A-5
WALL SECTIONS.....A-6
DOOR AND WINDOW DETAILS.....A-7

LIGHTING PLAN.....ME-1
POWER PLAN.....ME-2
ELECTRICAL NOTES.....ME-3

SET NO.

LINE	BEARING	DISTANCE
L1	N69°01'45"E	165.01'
L2	S66°11'51"E	34.85'
L3	S31°48'51"E	104.89'
L4	S10°34'09"W	144.59'
L5	S02°41'51"E	177.98'
L6	S32°23'09"W	91.84'
L7	S03°50'24"W	174.22'
L8	S59°17'09"W	103.48'
L9	S89°11'36"W	97.81'
L10	N83°22'09"W	204.82'
L11	S79°46'25"W	120.61'
L12	S36°34'43"E	152.00'
L13	S23°34'43"E	87.00'
L14	S35°34'43"E	59.00'
L15	S63°23'40"W	75.00'
L16	S70°23'40"W	100.00'
L17	S63°23'40"W	50.00'
L18	S48°23'40"W	150.00'
L19	N64°36'20"W	142.00'
L20	N84°36'20"W	12.00'
L21	N80°23'40"E	150.00'
L22	N69°23'40"E	75.00'
L23	N50°23'40"E	95.00'
L24	N29°23'40"E	55.00'
L25	N00°17'38"E	77.03'
L26	N05°39'11"W	54.22'
L27	S67°29'46"W	131.96'
L28	S75°38'39"W	92.50'
L29	S21°27'01"E	74.95'
L30	S79°53'15"W	75.04'
L31	S21°27'39"E	168.56'
L32	S76°18'23"W	20.19'
L33	N21°27'56"W	191.07'
L34	S72°12'20"W	126.79'
L35	S67°18'57"W	33.25'
L36	N51°02'55"W	95.46'
L37	N01°02'02"W	63.63'
L38	N63°18'16"W	36.94'
L39	N18°14'12"E	43.89'
L40	S89°05'44"E	76.22'
L41	N35°52'11"E	40.75'
L42	N16°07'34"E	108.71'
L43	N53°21'27"E	104.01'
L44	N19°08'22"W	68.45'
L45	N01°57'30"E	52.77'
L46	N11°15'05"E	44.24'
L47	N35°47'05"E	44.19'
L48	N55°38'16"E	61.16'
L49	N38°54'33"E	55.99'
L50	N57°21'13"E	171.02'
L51	N32°40'04"E	36.90'
L52	N26°02'16"W	63.08'
L53	N23°54'39"W	79.03'
L54	N57°09'52"W	243.51'
L55	N86°04'26"W	35.72'
L56	S32°00'04"W	37.07'
L57	S86°08'51"W	49.86'
L58	N09°06'27"E	94.51'
L59	N23°59'18"W	73.86'
L60	N16°41'10"E	68.92'
L61	S70°57'59"E	105.35'
L62	N52°59'08"E	56.49'
L63	N86°36'42"E	180.61'
L64	N56°58'54"E	37.18'
L65	N17°22'01"W	56.87'
L66	N62°15'35"W	107.26'
L67	N51°28'08"W	85.01'
L68	N71°48'28"E	152.05'
L69	S83°23'38"E	70.33'
L70	S36°05'11"E	129.51'
L71	S60°09'16"E	50.99'
L72	S88°56'42"E	73.79'
L73	N66°15'08"E	28.39'
L74	N30°48'27"E	37.64'
L75	N05°51'31"W	194.85'
L76	N49°43'04"W	129.26'
L77	N19°08'16"W	83.65'
L78	N25°46'46"E	54.43'
L79	N73°15'22"E	121.08'
L80	N45°05'04"E	33.31'
L81	N15°15'36"W	17.45'
L82	N57°32'01"W	124.88'
L83	N07°18'50"E	121.74'
L84	N00°03'45"E	185.45'
L85	N51°13'56"W	22.96'
L86	N58°24'18"W	25.61'
L87	S45°05'36"W	191.26'
L88	N81°38'32"W	69.82'
L89	S54°32'51"W	68.08'
L90	S01°41'24"W	63.53'
L91	S29°06'21"W	48.61'
L92	S80°20'27"W	47.45'
L93	N58°17'25"W	97.60'
L94	N08°03'39"E	212.60'
L95	N10°15'32"W	33.20'
L96	N53°09'49"W	83.69'
L97	S71°19'22"W	114.41'
L98	N31°48'17"E	97.43'
L99	N14°54'26"W	161.52'
L100	N58°12'21"W	52.34'
L101	N53°12'11"W	156.68'
L102	N45°22'18"W	24.32'
L103	N28°26'03"W	20.60'
L104	N19°40'10"W	140.54'
L105	N24°01'14"W	60.58'
L106	N34°22'11"W	51.82'
L107	N40°27'53"W	22.63'
L108	N61°54'06"E	44.73'
L109	N69°29'31"E	52.41'
L110	N70°50'19"E	171.02'
L111	N16°09'02"E	132.38'
L112	S39°44'06"E	106.07'

OUT PARCEL 1
0.59 ACRES
MICHAEL & JUNE PERKINS
D.B. 153 PG. 795

LINE	BEARING	DISTANCE
L1	N67°11'35"E	300.11'
L2	S17°21'39"W	224.84'
L3	N64°52'37"W	231.46'

OUT PARCEL 2
CEMETARY
1.35 ACRES

LINE	BEARING	DISTANCE
L1	N67°29'08"E	316.43'
L2	S20°13'06"E	54.40'
L3	S69°19'31"W	30.38'
L4	S19°28'10"E	48.76'
L5	N67°29'37"E	39.11'
L6	S18°21'09"E	99.88'
L7	S72°31'04"W	325.71'
L8	N18°46'42"W	173.49'

OUT PARCEL 3
0.17 ACRES
CHARLIE OWENS
D.B. 130 PG. 425

LINE	BEARING	DISTANCE
L1	N73°27'49"E	75.00'
L2	S21°27'55"E	100.01'
L3	S73°28'04"W	75.00'
L4	N21°27'56"W	100.00'

OUT PARCEL 4
0.10 ACRES
CHARLIE OWENS
D.B. 130 PG. 425

LINE	BEARING	DISTANCE
L1	N73°28'55"E	75.00'
L2	S21°30'57"E	50.01'
L3	S73°27'15"W	75.44'
L4	N21°00'36"W	50.01'

PARCEL 2
0.51 ACRES

LINE	BEARING	DISTANCE
L1	N81°28'41"E	202.84'
L2	S84°44'06"E	100.00'
L3	S53°06'35"W	39.75'
L4	S29°19'12"W	83.02'
L5	S56°21'45"W	66.92'
L6	N09°31'01"W	37.31'
L7	N81°04'01"W	125.02'
L8	N36°59'23"W	70.39'

Survey Certification:

This is to certify to: ______________________________
That this map or plat and the survey on which it is based were made:

(I) in accordance with "minimum standard detail requirments for ALTA/ACSM land title surveys, thereof, and

(II) prusuant to the accuracy standards (as adopted by ALTA and ACSM and in effect on the date of this certification). This suvey was performed with the benefit of ______________________ for title insurance No: ________ Dated ___________.

Date: ________________________

(signed) ____________________________ (seal)

Registration No. ____________________

State of Kentucky
RODNEY D. JONES
L. S. 2241
LICENSED
Land Surveyor

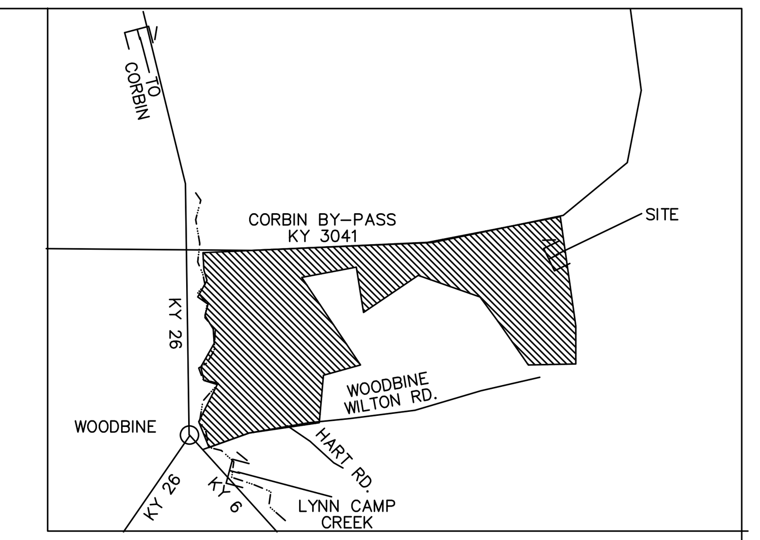

VICINITY MAP
(no scale)

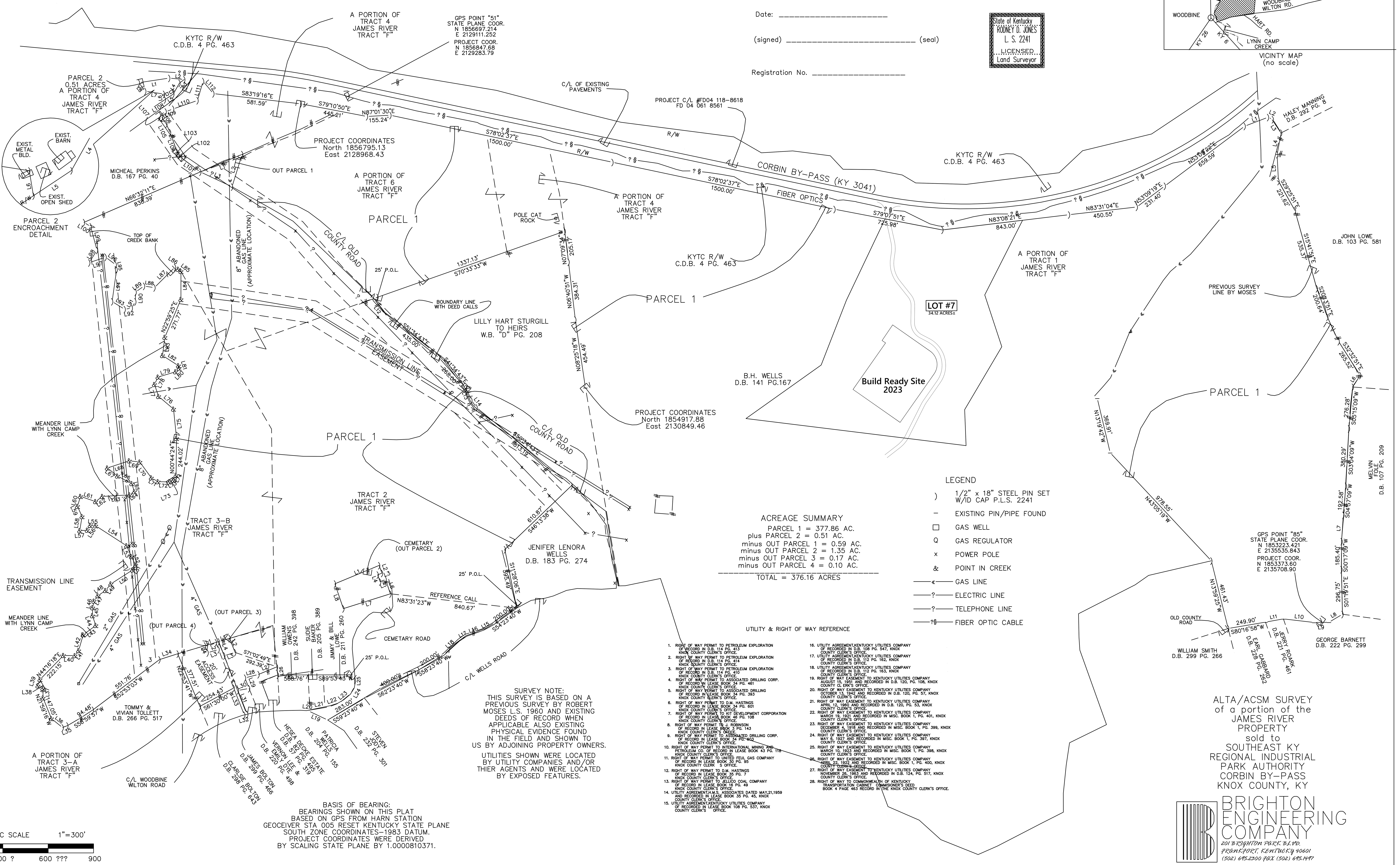

LEGEND

)	1/2" x 18" STEEL PIN SET W/ID CAP P.L.S. 2241
–	EXISTING PIN/PIPE FOUND
☐	GAS WELL
Q	GAS REGULATOR
×	POWER POLE
&	POINT IN CREEK
——«——	GAS LINE
——?——	ELECTRIC LINE
——?——	TELEPHONE LINE
——?§——	FIBER OPTIC CABLE

ACREAGE SUMMARY

PARCEL 1 = 377.86 AC.
plus PARCEL 2 = 0.51 AC.
minus OUT PARCEL 1 = 0.59 AC.
minus OUT PARCEL 2 = 1.35 AC.
minus OUT PARCEL 3 = 0.17 AC.
minus OUT PARCEL 4 = 0.10 AC.

TOTAL = 376.16 ACRES

UTILITY & RIGHT OF WAY REFERENCE

1. RIGHT OF WAY PERMIT TO PETROLEUM EXPLORATION OF RECORD IN D.B. 114 PG. 413 KNOX COUNTY CLERK'S OFFICE.
2. RIGHT OF WAY PERMIT TO PETROLEUM EXPLORATION OF RECORD IN D.B. 114 PG. 414 KNOX COUNTY CLERK'S OFFICE.
3. RIGHT OF WAY PERMIT TO PETROLEUM EXPLORATION OF RECORD IN D.B. 114 PG. 410 KNOX COUNTY CLERK'S OFFICE.
4. RIGHT OF WAY PERMIT TO ASSOCIATED DRILLING CORP. OF RECORD IN LEASE BOOK 34 PG. 461 KNOX COUNTY CLERK'S OFFICE.
5. RIGHT OF WAY PERMIT TO ASSOCIATED DRILLING OF RECORD IN LEASE BOOK 34 PG. 393 KNOX COUNTY CLERK'S OFFICE.
6. RIGHT OF WAY PERMIT TO D.M. HASTINGS OF RECORD IN LEASE BOOK 34 PG. 601 KNOX COUNTY CLERK'S OFFICE.
7. RIGHT OF WAY PERMIT TO KIT DEVELOPMENT CORPORATION OF RECORD IN LEASE BOOK 46 PG. 108 KNOX COUNTY CLERK'S OFFICE.
8. RIGHT OF WAY PERMIT TO J. ROBINSON OF RECORD IN LEASE BOOK 3 PG. 143 KNOX COUNTY CLERK'S OFFICE.
9. RIGHT OF WAY PERMIT TO ASSOCIATED DRILLING CORP. OF RECORD IN LEASE BOOK 34 PG. 603 KNOX COUNTY CLERK'S OFFICE.
10. RIGHT OF WAY PERMIT TO INTERNATIONAL MINING AND PETROLEUM CO. OF RECORD IN LEASE BOOK 43 PG. 118 KNOX COUNTY CLERK'S OFFICE.
11. RIGHT OF WAY PERMIT TO UNITED FEUL GAS COMPANY OF RECORD IN LEASE BOOK 30 PG. 95 KNOX COUNTY CLERK S OFFICE.
12. RIGHT OF WAY PERMIT TO D.M. HASTINGS OF RECORD IN LEASE BOOK 35 PG. 7 KNOX COUNTY CLERK'S OFFICE.
13. RIGHT OF WAY PERMIT TO JELLICO COAL COMPANY OF RECORD IN LEASE BOOK 16 PG. 49 KNOX COUNTY CLERK'S OFFICE.
14. UTILITY AGREEMENT,H.M.S. ASSOCIATES DATED MAY,21,1959 AND RECORDED IN LEASE BOOK 35 PG. 45, KNOX COUNTY CLERK'S OFFICE.
15. UTILITY AGREEMENT,KENTUCKY UTILITIES COMPANY OF RECORDED IN LEASE BOOK 108 PG. 537, KNOX COUNTY CLERK'S OFFICE.
16. UTILITY AGREEMENT,KENTUCKY UTILITIES COMPANY OF RECORDED IN D.B. 108 PG. 547, KNOX COUNTY CLERK'S OFFICE.
17. UTILITY AGREEMENT,KENTUCKY UTILITIES COMPANY OF RECORDED IN D.B. 112 PG. 162, KNOX COUNTY CLERK'S OFFICE.
18. UTILITY AGREEMENT,KENTUCKY UTILITIES COMPANY OF RECORDED IN D.B. 112 PG. 163, KNOX COUNTY CLERK'S OFFICE.
19. RIGHT OF WAY EASEMENT TO KENTUCKY UTILITIES COMPANY AUGUST 15, 1951 AND RECORDED IN D.B. 120, PG. 108, KNOX COUNTY CL ERK'S OFFICE.
20. RIGHT OF WAY EASEMENT TO KENTUCKY UTILITIES COMPANY OCTOBER 13, 1942 AND RECORDED IN D.B. 120, PG. 57, KNOX COUNTY CLERK'S OFFICE.
21. RIGHT OF WAY EASEMENT TO KENTUCKY UTILITIES COMPANY APRIL 12, 1960 AND RECORDED IN D.B. 120, PG. 53, KNOX COUNTY CLERK'S OFFICE.
22. RIGHT OF WAY EASEMENT TO KENTUCKY UTILITIES COMPANY MARCH 19, 1921 AND RECORDED IN MISC. BOOK 1, PG. 401, KNOX COUNTY CLERK'S OFFICE.
23. RIGHT OF WAY EASEMENT TO KENTUCKY UTILITIES COMPANY DECEMBER 4, 1918 AND RECORDED IN MISC. BOOK 1, PG. 399, KNOX COUNTY CLERK'S OFFICE.
24. RIGHT OF WAY EASEMENT TO KENTUCKY UTILITIES COMPANY MAY 6, 1927 AND RECORDED IN MISC. BOOK 1, PG. 397, KNOX COUNTY CLERK'S OFFICE.
25. RIGHT OF WAY EASEMENT TO KENTUCKY UTILITIES COMPANY MARCH 10, 1923 AND RECORDED IN MISC. BOOK 1, PG. 398, KNOX COUNTY CLERK'S OFFICE.
26. RIGHT OF WAY EASEMENT TO KENTUCKY UTILITIES COMPANY APRIL 22, 1922 AND RECORDED IN MISC. BOOK 1, PG. 400, KNOX COUNTY CLERK'S OFFICE.
27. RIGHT OF WAY EASEMENT TO KENTUCKY UTILITIES COMPANY NOVEMBER 26, 1963 AND RECORDED IN D.B. 124, PG. 517, KNOX COUNTY CLERK'S OFFICE.
28. RIGHT OF WAY TO COMMONWEALTH OF KENTUCKY TRANSPORTATION CABINET COMMISIONER'S DEED BOOK 4 PAGE 463 RECORD IN THE KNOX COUNTY CLERK'S OFFICE.

SURVEY NOTE:
THIS SURVEY IS BASED ON A PREVIOUS SURVEY BY ROBERT MOSES L.S. 1960 AND EXISTING DEEDS OF RECORD WHEN APPLICABLE ALSO EXISTING PHYSICAL EVIDENCE FOUND IN THE FIELD AND SHOWN TO US BY ADJOINING PROPERTY OWNERS.

UTILITIES SHOWN WERE LOCATED BY UTILITY COMPANIES AND/OR THIER AGENTS AND WERE LOCATED BY EXPOSED FEATURES.

BASIS OF BEARING:
BEARINGS SHOWN ON THIS PLAT BASED ON GPS FROM HARN STATION GEOCEIVER STA 005 RESET KENTUCKY STATE PLANE SOUTH ZONE COORDINATES–1983 DATUM. PROJECT COORDINATES WERE DERIVED BY SCALING STATE PLANE BY 1.0000810371.

GRAPHIC SCALE 1"=300'
0 300 600 900

ALTA/ACSM SURVEY
of a portion of the
JAMES RIVER PROPERTY
sold to
SOUTHEAST KY REGIONAL INDUSTRIAL PARK AUTHORITY
CORBIN BY-PASS
KNOX COUNTY, KY

BRIGHTON ENGINEERING COMPANY
201 BRIGHTON PARK BLVD.
FRANKFORT, KENTUCKY 40601
(502) 695.2300 FAX (502) 695.1497

SOUTHEAST BUSINESS PARK
CORBIN, KENTUCKY

DRAWING NO.
SS1
SHEET OF

NOT FOR RECORDING – FOR REFERENCE ONLY – TO BUILD READY SITE

EROSION CONTROL NOTES:

THE EROSION CONTROL MEASURES NOTED BELOW ARE MINIMUMS AND DO NOT RELIEVE THE CONTRACTOR FROM THE RESPONSIBILITY FOR COMPLIANCE WITH ANY AND ALL U.S. EPA , KENTUCKY DIVISION OF WATER AND/OR LOCAL REQUIREMENTS.

CONTRACTOR SHALL ESTABLISH EROSION CONTROL MEASURES BEFORE DISTURBING SITE.

ALL EROSION CONTROL DEVICES SHALL BE PROPERLY MAINTAINED DURING ALL PHASES OF CONSTRUCTION UNTIL THE COMPLETION OF ALL CONSTRUCTION ACTIVITIES AND ALL DISTURBED AREAS HAVE BEEN STABILIZED.

ADDITIONAL CONTROL DEVICES MAY BE REQUIRED DURING CONSTRUCTION, IN ORDER TO CONTROL EROSION AND/OR OFFSITE SEDIMENTATION. ALL TEMPORARY CONTROL DEVICES SHALL BE REMOVED ONCE CONSTRUCTION IS COMPLETED AND THE SITE IS STABILIZED.

IT IS THE CONTRACTOR'S RESPONSIBILITY TO PREVENT EROSION ONTO ADJACENT PROPERTY. ANY REMEDIAL MEASURES REQUIRED TO CORRECT DAMAGE CREATED BY EROSION SHALL BE AT THE CONTRACTOR'S EXPENSE.

TOPSOIL STOCKPILES THAT ARE NOT BEING UTILIZED FOR A PERIOD OF 14 DAYS TO BE SURROUNDED BY SILT FENCE.

SILT FENCES TO BE CLEANED OUT WHEN THEY BECOME ONE-THIRD FULL.

WHEN SEASONAL CONDITIONS PROHIBIT THE APPLICATION OF TEMPORARY OR PERMANENT SEEDING, NON-VEGETATIVE SOIL STABILIZATION PRACTICES SUCH AS MULCHING AND MATTING SHALL BE USED, UNTIL SUCH TIME AS CONDITIONS PERMIT.

ALL SEDIMENT CONTROL MEASURES SHALL BE INSPECTED AT LEAST ONCE EVERY SEVEN DAYS AND AFTER ANY STORM EVENT OF GREATER THAN 0.5 INCHES OF PRECIPITATION DURING ANY 24-HOUR PERIOD. A FIELD LOG OF INSPECTIONS SHALL BE MADE AND A COPY GIVEN TO THE OWNER.

ALL SEDIMENT CONTROL FEATURES SHALL BE MAINTAINED UNTIL FINAL SOIL STABILIZATION HAS BEEN OBTAINED.

STABILIZATION MEASURES SHALL BE INITIATED AS SOON AS PRACTICAL IN PORTIONS OF THE SITE WHERE CONSTRUCTION ACTIVITIES HAVE TEMPORARILY OR PERMANENTLY CEASED, BUT NO MORE THAN 14 DAYS AFTER THE CONSTRUCTION ACTIVITY IN THAT PART OF THE SITE HAS TEMPORARILY OR PERMANENTLY CEASED UNLESS THAT ACTIVITY IN THAT PORTION OF THE SITE WILL RESUME WITHIN 21 DAYS.

THE CONTRACTOR MUST TAKE NECESSARY ACTION TO MINIMIZE TRACKING OF MUD ONTO PAVED ROADWAY FROM CONSTRUCTION AREAS. THE CONTRACTOR SHALL DAILY REMOVE MUD/SOIL FROM PAVEMENT, AS MAY BE REQUIRED

PROVIDE TRAFFIC CONTROL IN ACCORDANCE WITH THE MANUAL FOR UNIFORM TRAFFIC CONTROL DEVICES AND THE KENTUCKY DEPARTMENT OF HIGHWAYS GUIDANCE MANUAL.

MAINTAIN ACCESS TO EXISTING BUSINESSES AND EXISTING ROADS.

ALL EARTHWORK TO COMPLY WITH KENTUCKY DEPT. OF HIGHWAYS (KY-DOH SECTION 400) SPECIFICATIONS FOR ROAD AND BRIDGE CONSTRUCTION, EDITION OF 2000 AND ANY AMENDMENTS.

THE CONTRACTOR SHALL SHALL LIMIT ACCESS TO THE SITE TO THE CONSTRUCTION ENTRANCES. THE LOCATION OF THE CONSTRUCTION ENTRANCES SHALL BE APPROVED BY THE ENGINEER AND DESIGNATED ON THE SWPPP. THE CONTRACTOR SHALL INSTALL STONE SURFACE AT THE LOCATION WHERE CONSTRUCTION TRAFFIC LEAVES AND ENTERS THE SITE. THESE ACCESS POINTS SHALL BE MIN. 20' WIDE, 50' LONG, 0.5' DEEP AND USE NO 7 STONE OVER GEOTEXTILE FABRIC. THE CONTRACTOR IS RESPONSIBLE FOR KEEPING STREETS AND PARKING AREAS FREE FROM MUD, DIRT, DEBRIS, AND ROCK. DUST SHALL BE KEPT TO A MINIMUM BY UTILIZING SPRINKLING, CALCIUM CHLORIDE, VEGETATIVE COVER, SPRAY ON ADHESIVES OR OTHER APPROVED METHODS. THIS ENTRANCE SHALL BE MAINTAINED UNTIL THE STREET HAS BEEN CONSTRUCTED.

FOR REFERENCE SEE SHEET C-1

DROP BOX INLET PROTECTION NOTE:
ALL INLET & OUTLET PROTECTION TO BE IN CONFORMANCE WITH THE KENTUCKY EROSION PREVENTION AND SEDIMENT CONTROL FIELD GUIDE

C SILT TRAP TYPE 'C'
N.T.S.

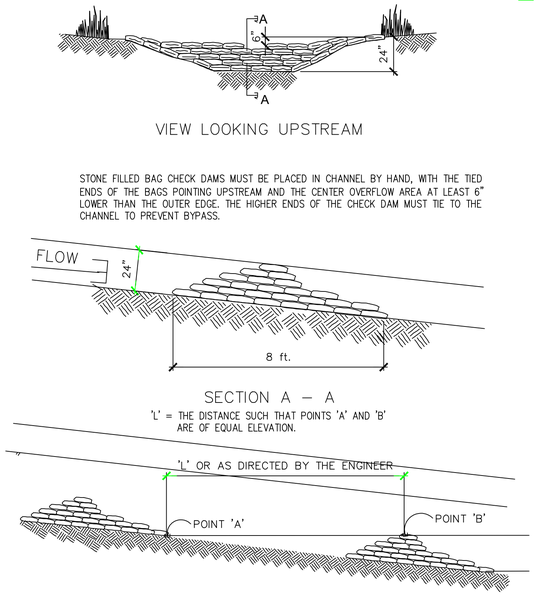

D SILT CHECK DAM TYPE "D"
NTS

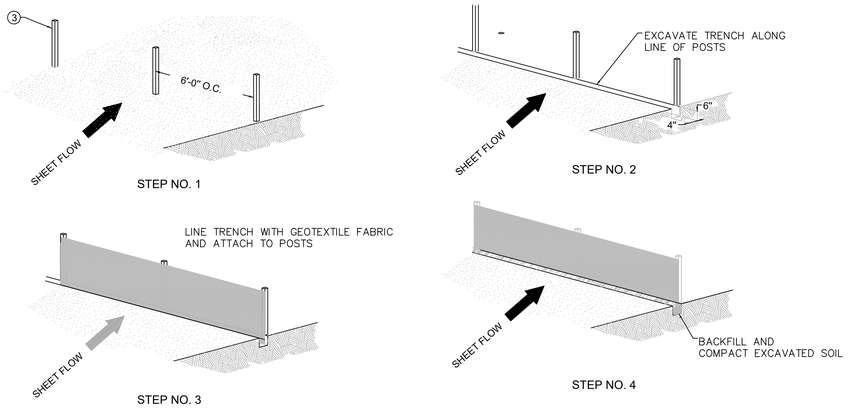

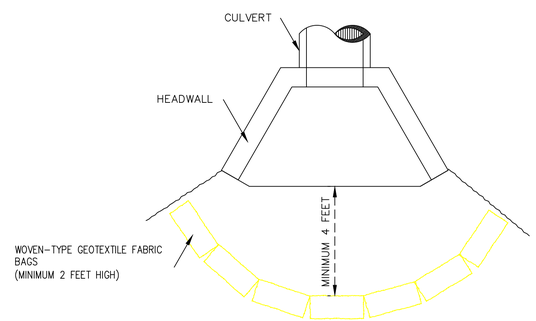

B CULVERT INLET SEDIMENT BARRIER TYPE "B"
NTS

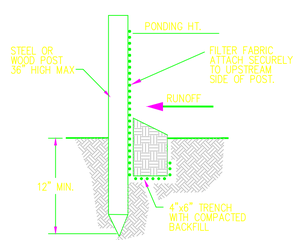

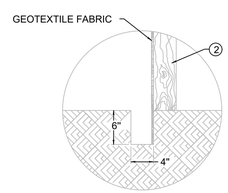

SECTIONAL DETAIL

NOTES

1. SEE STANDARD SPECIFICATIONS FOR POST SIZE, GEOTEXTILE FABRIC, WIRE STAPLES AND ALL OTHER PERTINENT INFORMATION.
2. POSTS MAY BE WOODEN OR METAL T-SECTION.
3. POSTS SHALL BE SET 1'-4" DEEP.
4. INSPECT AND REPAIR FENCE AFTER EACH STORM EVENT AND REMOVE SEDIMENT WHEN NECESSARY.
5. REMOVED SEDIMENT SHALL BE DEPOSITED TO AN AREA THAT WILL NOT CONTRIBUTE SEDIMENT OFF-SITE AND CAN BE PERMANENTLY STABILIZED.
6. SILT FENCE SHALL BE PLACED ON SLOPE CONTOURS TO MAXIMIZE PONDING EFFICIENCY.

TEMP. SILT FENCE DETAILS
N.T.S.

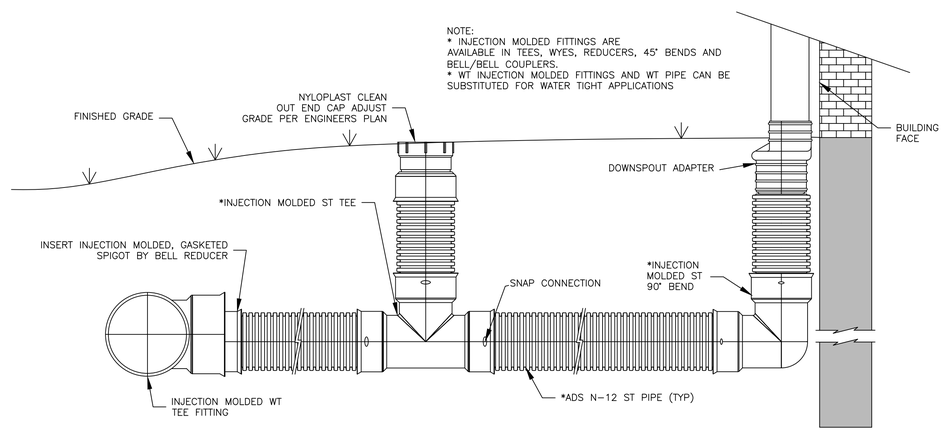

ROOF DRAIN DETAIL WITH CLEANOUT

Call 811 Before you Dig

SOUTHEAST KENTUCKY
INDUSTRIAL DEVELOPMENT AUTHORITY, INC.
SOUTHERN KENTUCKY BUSINESS PARK
SPECULATIVE BUILDING #5
KNOX COUNTY, KENTUCKY

DATE	REVISION	BY

© COPYRIGHT
NOTICE: This document discloses subject matter considered confidential by MSE of Kentucky, Inc. and as such is not to be disclosed to other parties, nor used for any purpose other than that for which it is furnished, nor shall any part thereof, nor the information contained therein, be copied or reproduced by any means or in any form without the express written permission of MSE of Kentucky, Inc.

PROJECT NO.	COMET
DESIGNED BY	G.A.R.
DRAWN BY	J.D.W.
CHECKED BY	G.A.R.
REVIEWED BY	G.A.R.
DATE	AUGUST 2023
SCALE	AS NOTED

MSE OF KENTUCKY, INC.
Engineers Architects Planners
624 Wellington Way
Lexington, KY 40503
www.mseinc.com
Phone: (859)223-5594
Fax: (859)223-2607

DRAWING NO.
EC-1
SHEET OF

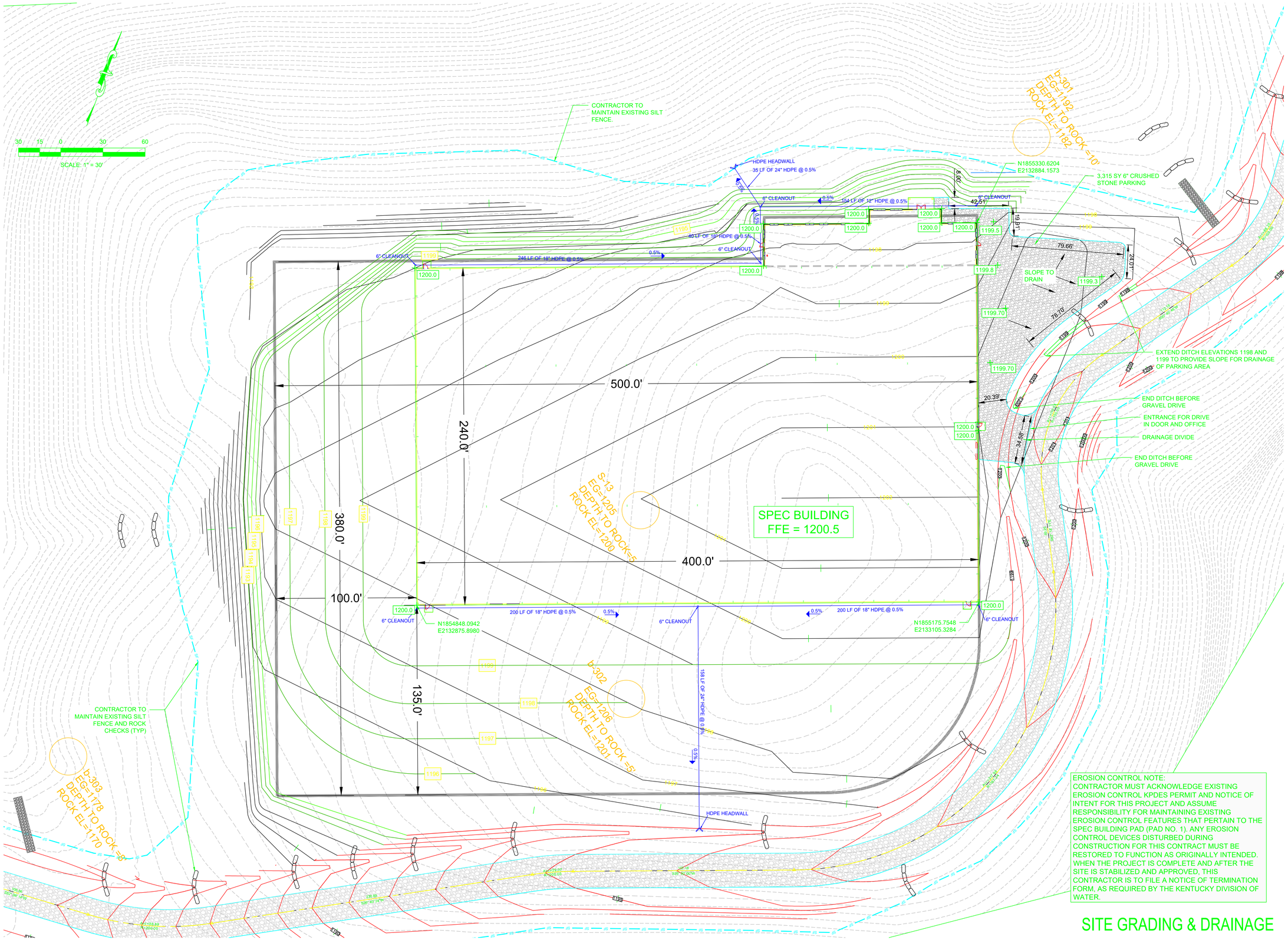

EROSION CONTROL NOTE:
CONTRACTOR MUST ACKNOWLEDGE EXISTING EROSION CONTROL KPDES PERMIT AND NOTICE OF INTENT FOR THIS PROJECT AND ASSUME RESPONSIBILITY FOR MAINTAINING EXISTING EROSION CONTROL FEATURES THAT PERTAIN TO THE SPEC BUILDING PAD (PAD NO. 1). ANY EROSION CONTROL DEVICES DISTURBED DURING CONSTRUCTION FOR THIS CONTRACT MUST BE RESTORED TO FUNCTION AS ORIGINALLY INTENDED. WHEN THE PROJECT IS COMPLETE AND AFTER THE SITE IS STABILIZED AND APPROVED, THIS CONTRACTOR IS TO FILE A NOTICE OF TERMINATION FORM, AS REQUIRED BY THE KENTUCKY DIVISION OF WATER.

SITE GRADING & DRAINAGE

STATE OF KENTUCKY
GLENDON ALLEN ROSS
8242
LICENSED PROFESSIONAL ENGINEER

SOUTHEAST KENTUCKY
INDUSTRIAL DEVELOPMENT AUTHORITY, INC.
SOUTHERN KENTUCKY BUSINESS PARK
SPECULATIVE BUILDING #5
KNOX COUNTY, KENTUCKY

DATE	REVISION	BY

© comcast
NOTICE: THE DRAWINGS, SPECS AND PLANS AS INSTRUMENTS OF SERVICE ARE AND SHALL REMAIN THE PROPERTY OF MSE OF KENTUCKY, INC. THEY ARE TO BE USED ONLY FOR THIS PROJECT AND NOT TO BE LOANED, COPIED OR REPRODUCED WITHOUT THE WRITTEN PERMISSION OF MSE OF KENTUCKY, INC.

PROJECT NO. COMET	
DESIGNED BY	G.A.R.
DRAWN BY	J.D.W.
CHECKED BY	G.A.R.
REVIEWED BY	G.A.R.
DATE	AUGUST 2023
SCALE	AS NOTED

Engineers
Architects
Planners
MSE OF KENTUCKY, INC.
Phone: (859)223-5604
Fax: (859)223-2607
624 Wallington Way
Lexington, KY 40503
www.mseflex.com

DRAWING NO.
C-1
SHEET OF

GENERAL STRUCTURAL NOTES

USE STRUCTURAL DRAWINGS IN CONJUNCTION WITH JOB SPECIFICATIONS, AND OTHER DRAWINGS.

SECTIONS AND DETAILS SHOWN SHALL BE CONSIDERED TYPICAL FOR ALL SIMILAR CONDITIONS.

CONTRACTOR SHALL VERIFY ALL CONDITIONS IN THE FIELD AND TAKE ALL NECESSARY FIELD MEASUREMENTS.

THE STRUCTURE SHOWN ON THESE DRAWINGS IS STRUCTURALLY SOUND ONLY IN ITS COMPLETED FORM. THE CONTRACTOR SHALL PROVIDE ALL NECESSARY BRACING TO STABILIZE THE BUILDING DURING CONSTRUCTION.

SAFETY

IN ACCORDANCE WITH GENERALLY ACCEPTED CONSTRUCTION PRACTICES, THE CONTRACTOR WILL BE SOLELY RESPONSIBLE FOR CONDITIONS OF THE JOB SITE, INCLUDING SAFETY OF ALL PERSONS AND PROPERTY DURING PERFORMANCE OF THE WORK. THIS REQUIREMENT WILL APPLY CONTINUOUSLY AND WILL NOT BE LIMITED TO NORMAL WORKING HOURS.

IF ENGINEER PROVIDES CONSTRUCTION REVIEW SERVICES, SUCH SERVICES SHALL NOT INCLUDE REVIEW OF THE CONTRACTOR'S SAFETY MEASURES IN, ON, OR NEAR THE CONSTRUCTION SITE.

REFERNCES

1. LATEST EDITION OF THE KY BUILDING CODE 2018 w/ AMENDMENTS
2. STRUCTURAL WELDING CODE ANSI/AWS D1.4 PER AMERICAN WELDING SOCIETY.
3. AMERICAN CONCRETE INSTITURE (ACI), LATEST ANNUAL EDITION.
   A. 117 – STANDARD SPECS FOR TOLERANCES FOR CONCRETE CONSTRUCTION AND MATERIALS.
   B. 301 – SPECS FOR STRUCTURAL CONCRETE FOR BUILDINGS.
   C. 305 – HOT WEATHER CONCRETING.
   D. 306 – COLD WEATHER CONCRETING.
   E. 315 – MANUAL OF STANDARD PRACTICE FOR DETAILING CONCRETE STRUCTURES.
4. CONCRETE REINFORCING STEEL INSTITUTE – MANUAL OF STANDARD PRACTICE AND SPECIFICATIONS FOR PLACING REINFORCEMENT.

DESIGN LOADS

GOVERNING CODE – KBC 2018 w/AMENDMENTS

1. ROOF LOAD
   DEAD LOAD = 5 PSF + 8 PSF COLLATERAL
   LIVE LOAD = 20 PSF (REDUCIBLE)

2. SNOW LOADS
   Pg = 15 PSF GROUND SNOW
   Ce = 0.7 Exposure Factor
   Is = 1.0 Importance Factor
   Pf = 10.5 PSF BALANCED
   Pf = 15 PSF MINIMUM (PLUS DRIFTING)

3. WIND LOADS
   - 115 MPH WIND SPEED
   - Exposure C
   - Ht & Exposure Coefficient = 1.00
   - Risk Category II

4. EARTHQUAKE LOADS
   - Site Class D (Default)
   - Seismic Hazard Exposure Group II
   - Seismic Design Category C
   - Analysis by Equivalent Static Force Procedure
   - Ss = 0.292, S1 = 0.107
   - Sds = 0.305, Sd1 = 0.170
   - Ie = 1.0
   - Steel Framing Not Detailed
     - Ct = 0.033
     - R = 3.0
   - Seismic Coefficient, Cs = 0.102

CONCRETE

1. ALL CONCRETE WORK SHALL CONFORM TO ACI 301-18, "SPECIFICATIONS FOR BUILDINGS", EXCEPT AS NOTED BELOW. REFER TO CHAPTER 16 OF ACI 301 FOR REPORTS FROM TESTS THAT SHALL BE SUBMITTED TO THE STRUCTURAL ENGINEER, ARCHITECT, OWNER, ANY APPLICABLE CONTRACTORS, CONCRETE SUPPLIER, AND BUILDING OFFICIAL.

2. CONCRETE WORK IN COLD WEATHER SHALL CONFORM TO ALL REQUIREMENTS OF ACI 306.1-90 "STANDARD SPECIFICATION FOR COLD WEATHER CONCRETING" AND ACI 306R-16 "COLD WEATHER CONCRETING".

3. CONCRETE WORK IN HOT WEATHER SHALL CONFORM TO ALL REQUIREMENTS OF ACI 305R-20 "HOT WEATHER CONCRETING". THE AIR TEMPERATURE, RELATIVE HUMIDITY, CONCRETE TEMPERATURE, AND WIND VELOCITY SHALL BE ENTERED INTO NOMOGRAPH FIG. 2.1.5 TO DETERMINE IF PRECAUTIONS AGAINST PLASTIC SHRINKAGE ARE REQUIRED.

4. REBAR FABRICATION, PLACEMENT, SPLICING, ETC. SHALL BE IN ACCORDANCE WITH THE LATEST EDITIONS OF ACI 318, THE CONCRETE REINFORCING STEEL INSTITUTE (CRSI) HANDBOOK AND ANY OTHER APPLICABLE PUBLICATIONS.

5. A SLUMP TEST SHALL BE PERFORMED BEFORE ANY HRWR IS ADDED.

6. CONCRETE MATERIAL SPECIFICATION: (f'c BASED ON 28 DAYS U.N.O.)

   –COMPRESSIVE STRENGTH, f'c = 3000 PSI, NORMAL AGGREGATE, U.N.O.
   –INTERIOR SLABS, f'c = 4000 PSI (28 DAYS), 1800 PSI AT 3 DAYS, NORMAL AGGREGATE, MIN CEMENT CONTENT PER ACI 301-89 TABLE 3.1.4.2(b), HRWR ADMIXTURE REQ'D., MAX WATER/CEMENT RATIO = 0.50
   –EXTERIOR SLABS, SIDEWALKS, ETC.: f'c = 3500 PSI, (4-1/2% – 7-1/2% ENTRAINED AIR), MIN PORTLAND CEMENT = 520 LB/CY, MAX WATER/CEMENT RATIO = 0.45.
   –FOOTINGS, f'c = 3000 PSI.
   –WALLS, f'c = 3000 PSI.

7. UNLESS OTHERWISE NOTED, REINFORCEMENT BARS TO HAVE MINIMUM CONCRETE COVER AS SHOWN BELOW:

   CONCRETE CAST AGAINST AND PERMANENTLY EXPOSED TO EARTH: 3 INCHES

   CONCRETE EXPOSED TO EARTH OR WEATHER:
   #5 BARS AND SMALLER 1½" INCHES
   OTHER 2 INCHES

   CONCRETE NOT EXPOSED TO EARTH OR WEATHER:
   BEAM AND COLUMN BARS INCLUDING TIES, STIRRUPS AND SPIRALS 1½" INCHES

   SLABS, WALLS, AND JOISTS:
   #11 BARS AND SMALLERS ¾" INCHES
   OTHERS 1½" INCHES

8. ALL EXPOSED EDGES ARE TO BE CHAMFERED ¾" INCH, UNO.

9. LAP SPLICE LENGTHS TO BE OF CLASS "B" PER ACI.

10. CONCRETE REINFORCEMENT SHALL CONFORM TO ASTM A615 OR A616, GRADE 60.

11. ISOLATED COLUMN FOOTINGS AND WALL FOOTINGS HAVE BEEN DESIGNED WITH AN ASSUMED ALLOWABLE SOIL BEARING PRESSURE OF 2000 PSF, UPON ENCOUNTERING ANY ADVERSE SOIL CONDITIONS CONTACT THE STRUCTURAL ENGINEER.

12. DO NOT CAST CONCRETE AGAINST WATER OR FROZEN WATER.

STRUCTURAL STEEL

1. FABRICATE AND ERECT ALL STRUCTURAL STEEL IN ACCORDANCE WITH THE AMERICAN INSTITUTE OF STEEL CONSTRUCTION "SPECIFICATION FOR THE DESIGN, FABRICATION AND ERECTION OF STRUCTURAL STEEL FOR BUILDINGS".

2. STRUCTURAL STEEL SHALL RECEIVE ONE SHOP COAT OF RUST-INHIBITIVE GREY PAINT.

3. THE STEEL USED SHALL HAVE THE FOLLOWING MINIMUM YIELD STRESS:
   STRUCTURAL MISC. STEEL SHAPES, BARS & PLATES, ASTM-A36, – 36 KSI, U.N.O.
   STRUCTURAL PIPE COLUMNS, ASTM A-53 – 35 KSI
   STRUCTURAL TUBE COLUMNS, ASTM A-500, GRADE B – 46 KSI
   STRUCTURAL WIDE FLANGE SHAPES, ASTM-A572, – 50 KSI, U.N.O.

4. BEAMS AND LINTELS SHALL BEAR 8" MINIMUM ON MASONRY UNLESS OTHERWISE NOTED.

5. USE ¾" DIAM. A-325 BOLTS FOR ALL STEEL TO STEEL CONNECTIONS U.N.O.
   USE E-70XX ELECTRODES FOR ALL SHOP AND FIELD WELDING. ALL WELDERS TO BE CERTIFIED PER AWS D1.1.

6. THE STEEL FABRICATOR SHALL DESIGN ALL STEEL TO STEEL CONNECTIONS NOT SHOWN ON THE DRAWINGS.

7. ALL CONTRACTORS SHALL SUBMIT TO THE STRUCTURAL ENGINEER A COPY OF THE STEEL ERECTION DRAWINGS AND SHOP FABRICATION DRAWINGS PRIOR TO FABRICATION.

8. FOR MISCELLANEOUS STEEL NOT SHOWN ON THESE DRAWINGS, SEE ARCHITECTURAL AND OTHER ENGINEERING DRAWINGS.

9. ANCHOR BOLTS TO BE GRADE A307 OR A325, UNLESS NOTED OTHERWISE.

10. FIELD BOLTED CONNECTIONS TO BE TIGHTENED BY ONE OF FOLLOWING METHODS:
    A. TURN OF THE NUT METHOD (AISC)
    B. CALIBRATED WRENCH METHOD
    C. LOAD INDICATOR WASHERS
    D. LOAD INDICATOR BOLTS

11. GROUT USED IN GROUT BEDS UNDER COLUMN BASE PLATES SHALL BE CEMENT BASED, NON-SHRINK GROUT. THE GROUT SHALL EXHIBIT NO SHRINKAGE IN ACCORDANCE WITH ASTM C827, "TEST METHOD FOR EARLY VOLUME CHANGE OF CEMENTITIOUS MIXTURES" AND SHALL HAVE A MINIMUM 28-DAY COMPRESSIVE STRENGTH OF 5000 PSI WHEN TESTED IN ACCORDANCE WITH ASTM C-109, "TEST METHOD FOR COMPRESSIVE STRENGTH OF HYDRAULIC CEMENT MORTARS."

12. STEEL BEAM WHICH BEAR ON MASONRY WALLS SHALL HAVE MASONRY ANCHORS AND SHALL BEAR EITHER ON BOND BEAMS OR FILLED BLOCK CORES AND SHALL BEAR A MINIMUM OF 8" UNLESS NOTED OTHERWISE.

SCHEDULE OF SPECIAL INSPECTIONS

ALL INSPECTIONS, TESTINGS AND VERIFICATIONS SHALL BE IN ACCORDANCE WITH IBC's TABLE 1704.3, 1704.4, AND 1704.5 AND AS FOLLOWS:

	FREQUENCY	
1. SOILS	CONTINUOUS	PERIODIC
A. VERIFY SITE PREPARATION COMPLIES WITH APPROVED SOILS REPORT.		X
B. VERIFY PLACEMENT AND COMPACTION OF FILL MATERIALS COMPLIES WITH APPROVED SOILS REPORT.		X
C. VERIFY DRY-DENSITY OF COMPACTED FILL COMPLIES WITH APPROVED SOILS REPORT.		X
2. SPREAD FOOTINGS, AND CONTINUOUS FOOTINGS		
A. INSPECT PLAN DIMENSIONS AND DEPTH.		X
B. INSPECT QUALITY AND SPACING OF BARS.		X
C. INSPECT PROPER CLEARANCE IS PROVIDED FOR BARS AT TOP AND BOTTOM.		X
D. VERIFY PROPER LAPS ARE PROVIDED.		X
E. INSPECT FOR PROPER DOWEL EMBEDMENT INTO FOOTING AND EXTENSION ABOVE FOOTING.		X
F. INSPECT FOR CORNER BARS, STEP BARS, DOWELS, ANCHOR BARS, OR EMBEDDED MATERIAL.		X
G. VERIFY SOILS ENGINEER HAS APPROVED DESIGN BEARING CAPACITY.		X
H. VERIFY THAT ALL LOOSE MATERIAL IS REMOVED FROM BOTTOM OF FOOTING.		X
I. INSPECT BOLTS TO BE INSTALLED IN FOOTINGS PRIOR TO AND DURING CONCRETE PLACEMENT.		X
3. STRUCTURAL STEEL		
A. MATERIAL VERIFICATION OF HIGH STRENGTH BOLTS, NUTS AND WASHERS.		X
B. CHECK ANCHOR BOLTS AND GROUTING OF BASE PLATES.		X
C. INSPECT COMPLETE PENETRATION OF MULTI-PASS FILLET WELDS.	N/A	
D. INSPECT COMPLETE PENETRATION OF SINGLE PASS FILLET WELDS > 5/16.	N/A	
E. INSPECT COMPLETE PENETRATION OF SINGLE PASS FILLET WELDS < 5/16.	N/A	
F. INSPECT ALL JOISTS WELDED DOWN OR CONNECTED TO STEEL PER SJI. SPECS.		X
G. INSPECT ALL BRIDGING, "X" BRIDGING, AND MISCELLANEOUS STEEL.		X
H. INSPECT THAT FIELD WELDED AREAS ARE PAINTED.		X
I. INSPECT THAT METAL DECK IS WELDED AS INDICATED ON DRAWINGS.		X
J. INSPECT THAT PROPER BEARING IS PROVIDED FOR JOISTS AND BEAMS ON STEEL OR CONCRETE	N/A	
K. INSPECTION OF STEEL FRAME JOINT DETAILS FOR COMPLIANCE WITH APPROVED CONSTRUCTION DOCUMENTS: MEMBERS LOCATIONS AND APPLICATION OF JOINT DETAILS AT EACH CONNECTION.		X
4. CONCRETE VERIFICATION AND INSPECTION		
A. VERIFYING USE OF REQUIRED DESIGN MIX.		X
B. SAMPLING FRESH CONCRETE AND PERFORMING SLUMP, AIR CONTENT AND DETERMINING THE TEMPERATURE OF FRESH CONCRETE AT THE TIME OF MAKING SPECIMENS FOR STRENGTH TESTS.		X
C. INSPECTION OF CONCRETE PLACEMENT FOR PROPER APPLICATION TECHNIQUES.		X
D. INSPECTION FOR MAINTENANCE OF SPECIFIED CURING TEMPERATURE AND TECHNIQUES.		X
5. MASONRY CONSTRUCTION		
A. MATERIAL VERIFICATION OF MASONRY UNITS, MORTAR TYPE, REINFORCING STRENGTH		X
B. SIZE, LAYOUT, BONDING AND PLACEMENT OF MASONRY UNITS.		X
C. PLACEMENT, POSITIONING, AND LAPPING OF REINFORCING.		X
D. PLACEMENT AND CONSOLIDATION OF GROUTED CELLS AT REBAR.		X
E. SIZE, LOCATION, SPACING, AND EMBEDMENT OF DOWELS, ANCHORS AND TIES.		X

SPECIAL INSPECTIONS

1. ENGAGING THE SPECIAL INSPECTORS
   THE CONTRACTOR MUST ENGAGE SPECIAL INSPECTORS TO PERFORM SPECIAL. THESE INSPECTORS MUST BE SUBMITTED TO THE STRUCTURAL ENGINEER FOR CONSIDERATION.

2. STEEL FABRICATOR
   THE STEEL FABRICATOR SHALL MAINTAIN WRITTEN PROCEDURAL AND QUALITY CONTROL MANUALS. THE STEEL FABRICATOR MUST BE ENGAGED WITH AN APPROVED SPECIAL INSPECTION AGENCY THAT IS PERFORMING PERIODIC AUDITS OF THE STEEL FABRICATORS OPERATIONS. UPON COMPLETION OF THE FABRICATION THE FABRICATOR MUST SUBMIT A "CERTIFICATE OF COMPLIANCE" TO THE BUILDING OFFICIAL STATING THAT THE WORK WAS PERFORMED IN ACCORDANCE WITH APPROVED CONSTRUCTION DOCUMENTS.

3. THE SPECIAL CONCRETE INSPECTOR MUST BE AN ACI LEVEL 1 TECHNICIAN.

4. CONCRETE FOUNDATIONS
   THE SPECIAL CONCRETE INSPECTOR SHALL INSPECT ALL FOUNDATIONS.
   THE INSPECTION SHALL INCLUDE:
   –CONFIRMATION OF ADEQUATE SOIL CONDITION.
   –VERIFICATION OF THE USE OF THE DESIGN MIX.
   –SAMPLE FRESH CONCRETE AS INDICATED IN THE SPECIFICATIONS.

5. SLABS ON GRADE
   THE SPECIAL CONCRETE INSPECTOR SHALL INSPECT ALL SLABS ON GRADE.
   THIS INSPECTION SHALL INCLUDE:
   –VERIFICATION OF ADEQUATE SOIL CONDITION BY OBSERVATION OF PROOF ROLLING.
   –VERIFICATION OF THE USE OF THE DESIGN MIX.
   –SAMPLE FRESH CONCRETE AS INDICATED IN THE SPECIFICATIONS.

6. CONTRACTORS STATEMENT OF RESPONSIBILITY
   THE CONTRACTORS RESPONSIBLE FOR ANY WORK REQUIRING SPECIAL INSPECTION SHALL SUBMIT A WRITTEN STATEMENT TO THE PRIME DESIGN PROFESSIONAL FOR SUBMITTAL TO THE CODE OFFICIALS:
   –ACKNOWLEDGING THE AWARENESS OF SPECIAL REQUIREMENTS.
   –ACKNOWLEDGING THAT CONTROL WILL BE EXERCISED TO OBTAIN
   –CONFORMANCE WITH CONSTRUCTION DOCUMENTS.
   –DEFINING PROCEDURES FOR EXERCISING CONTROL.
   –IDENTIFYING THE PERSONS EXERCISING CONTROL AND STATING THEIR QUALIFICATIONS.

STATE OF KENTUCKY
TRACY S. MITCHELL
8-15-23
19220
REGISTERED
PROFESSIONAL ENGINEER

ASG LLC
AMERICAN STRUCTURAL GROUP
CONSULTING STRUCTURAL ENGINEERS
225 SOUTH MAIN STREET
MONROE, OHIO 45050
PH 513-402-7600
WWW.ASG-ENG.COM
"Value Engineering the First Time"

REV	DESCRIPTION	DATE
6		
5		
4		
3		
2		
1		
0	PERMIT ISSUE	08.15.23

PROJECT
SPECULATIVE BUILDING #5
FOR SOUTHERN KENTUCKY
BUSINESS PARK
CORBIN, KENTUCKY

CLIENT
MSE, INC.
624 WELLINGTON WAY
LEXINGTON, KY. 40524
PH: 859-223-5694

GENERAL NOTES

CUSTOMER JOB NO.:	______
CUSTOMER:	MSE
DRAWN BY:	GSM
DATE:	08.07.23
CKD. BY:	TSM
DATE:	DATE
ASG JOB NO.	231358
DRAWING FILENAME:	1358F0.0
DRAWING NO:	F0.0

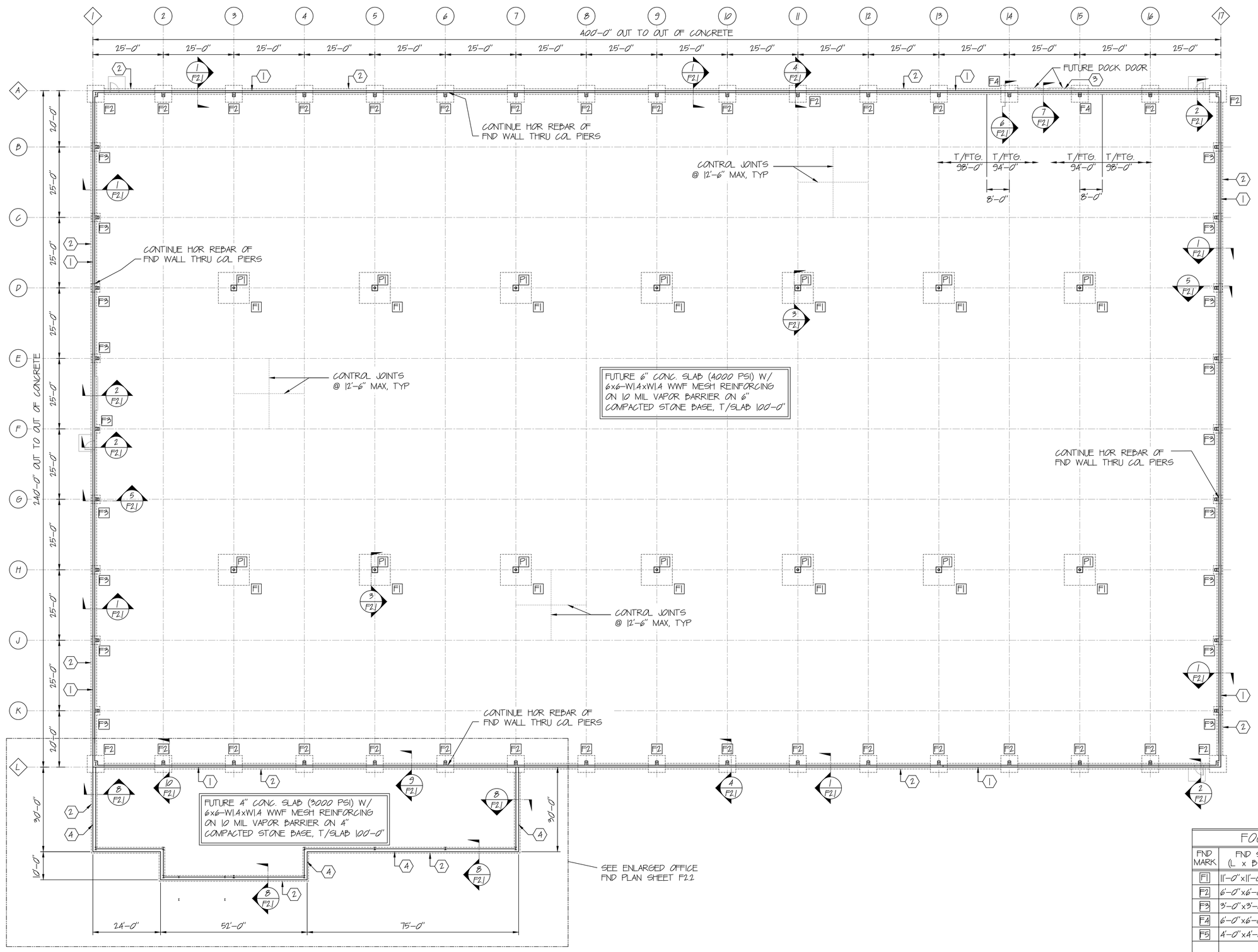

FOUNDATION PLAN

SCALE: 1/16" = 1'-0"

ALL COLUMNS BY PEMB SUPPLIER

N

DRAWING NOTES

1. 8" CONC. KNEEWALL, T/KNEEWALL T/KNEEWALL = 99'-4" @ OPENING
2. CONC. FOOTING 2'-0" WIDE x 1'-0 #4's CONT. @ BTM. T/GRADE BEAN
3. CONC. FOOTING 2'-0" WIDE x 1'-0 #4's CONT. @ BTM. T/GRADE BEAN
4. 12" CONC. KNEEWALL, T/KNEEWALL W/ (1) COURSE OF 8" CMU W/ #4

FOOTING SCHEDULE

END MARK	END SIZE (L x B x D)	REINFORCING BOTT, E.W.	TOP OF FOOTING
F1	11'-0"x11'-0"x2'-0"	(14) - #6	97'-4"
F2	6'-0"x6'-0"x1'-0"	(7) - #5	98'-0"
F3	3'-0"x3'-0"x1'-0"	(4) - #4	98'-0"
F4	6'-0"x6'-0"x1'-0"	(7) - #5	94'-0"
F5	4'-0"x4'-0"x1'-0"	(5) - #4	98'-0"
P1	2'-0"x2'-0"x2'-0"	(8) - #5 VER	99'-4"

FOUNDATION AND FOOTING DESIGN BASED UPON A SOIL BEARING PRESSURE OF 2000 PSF PER SOILS REPORT BY CONSULTING SERVICES INC., PROJECT NO. LX160013 DATED FEB. 13, 2016.

STATE OF KENTUCKY
TRACY S. MCCOMBS
19220
REGISTERED PROFESSIONAL ENGINEER

ASG LLC
AMERICAN STRUCTURAL GROUP
CONSULTING STRUCTURAL ENGINEERS
225 SOUTH MAIN STREET
MONROE, OHIO 45050
PH: 513-402-8000
WWW.ASG-ENG.COM
"Value Engineering the First Time"

REV	DESCRIPTION	DATE
6		
5		
4		
3		
2		
1	PERMIT ISSUE	08.15.23

PROJECT
SPECULATIVE BUILDING #5
FOR SOUTHERN KENTUCKY
BUSINESS PARK
CORBIN, KENTUCKY

CLIENT
MSE, INC.
624 WELLINGTON WAY
LEXINGTON, KY. 40514
PH: 859-223-5894

FOUNDATION PLAN

CUSTOMER JOB NO.:	———
CUSTOMER:	MSE
DRAWN BY:	GSM
DATE:	08.07.23
CKD. BY:	TSM
DATE:	DATE
ASG JOB NO.	23\358
DRAWING FILENAME:	1358F1.1
DRAWING NO:	F1.1

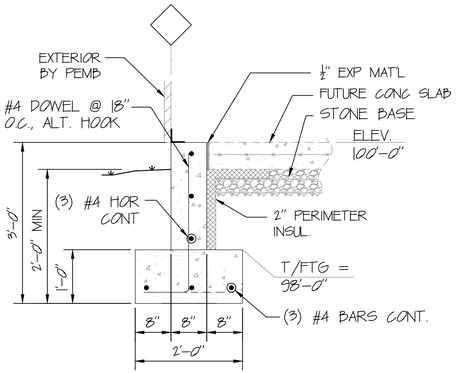

SECTION 1
SCALE: 3/4"=1'-0" F1.1

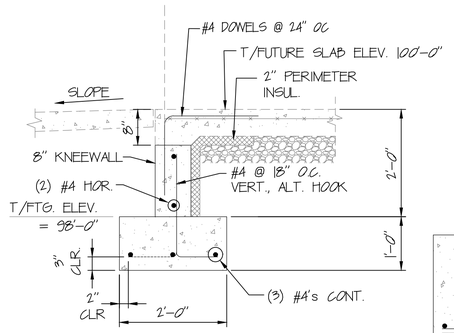

AT DOOR & STOREFRONT

SECTION 2
SCALE: 3/4"=1'-0" F1.1

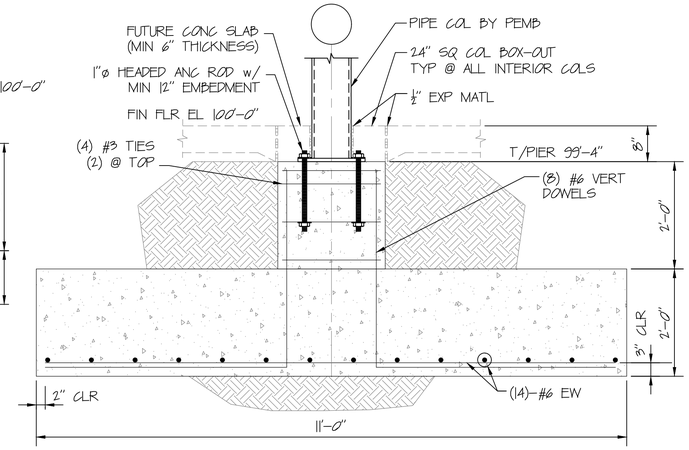

SECTION 3
SCALE: 3/4"=1'-0" F1.1

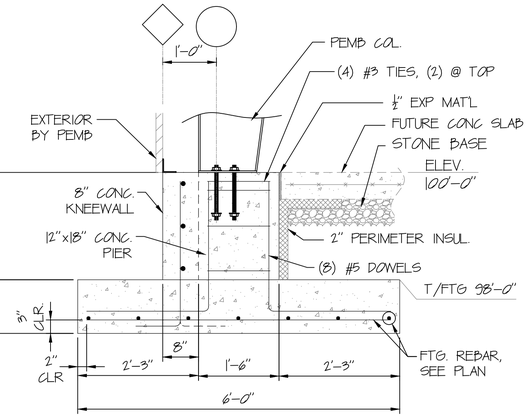

SECTION 4
SCALE: 3/4"=1'-0" F1.1

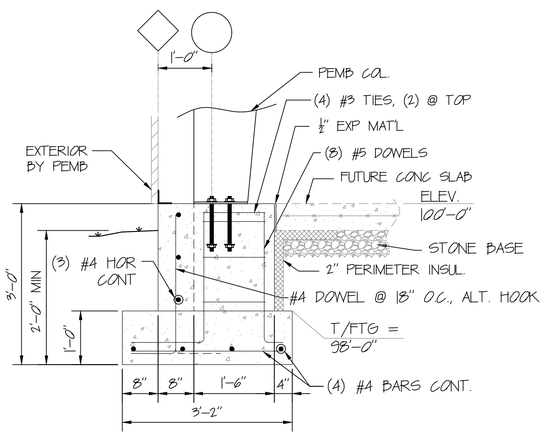

SECTION 5
SCALE: 3/4"=1'-0" F1.1

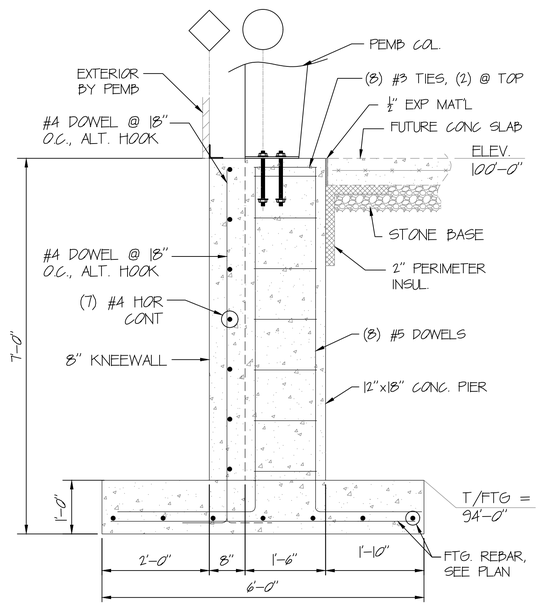

SECTION 6
SCALE: 3/4"=1'-0" F1.1

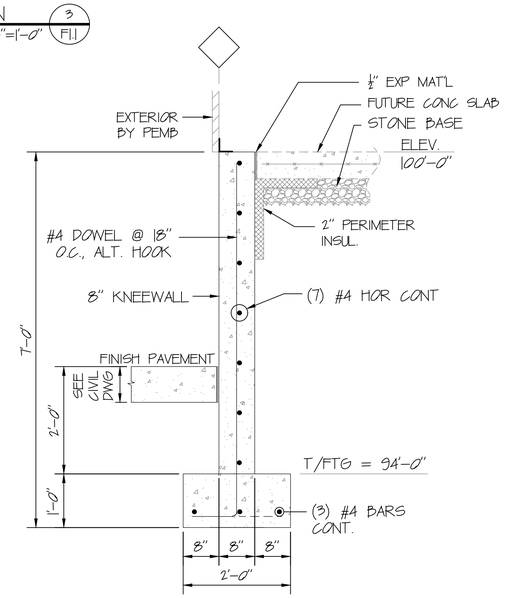

SECTION 7
SCALE: 3/4"=1'-0" F1

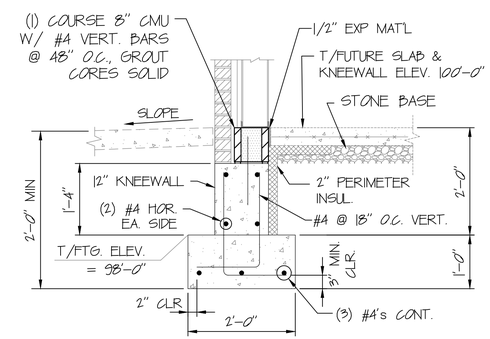

SECTION 8 8
SCALE: 3/4"=1'-0" F1.1 F2.2

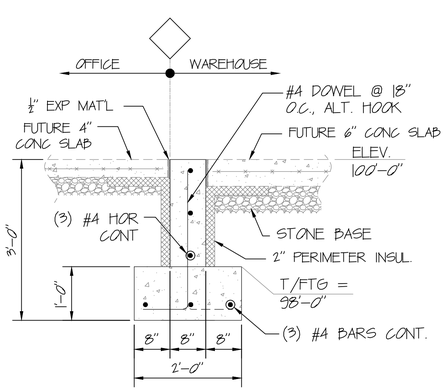

SECTION 9 9
SCALE: 3/4"=1'-0" F1.1 F2.2

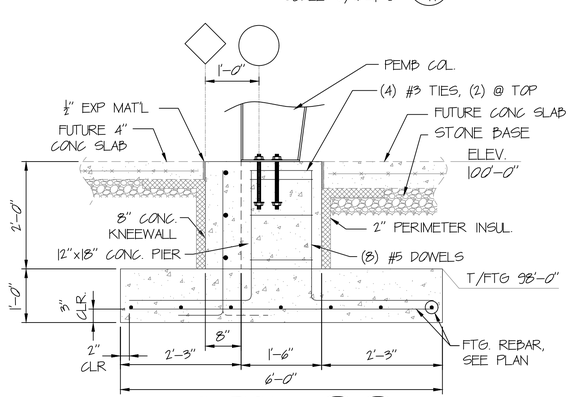

SECTION 10 10
SCALE: 3/4"=1'-0" F1.1 F2.2

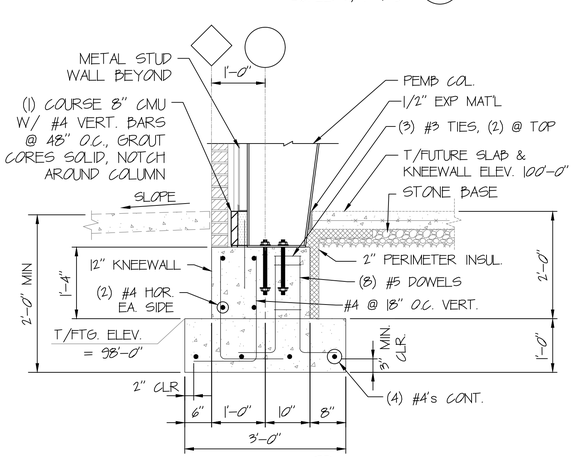

SECTION 11
SCALE: 3/4"=1'-0" F2.2

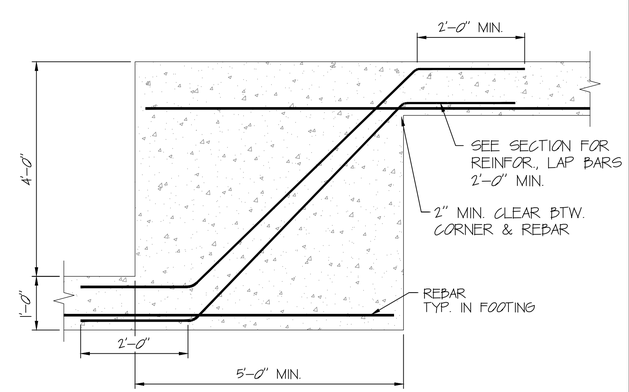

STEP IN FTG. DETAIL
SCALE: 3/4"=1'-0" F2.1

STATE OF KENTUCKY
TRACY S. MCCOMBS
19220
08-15-23
REGISTERED PROFESSIONAL ENGINEER

ASG LLC
AMERICAN STRUCTURAL GROUP
CONSULTING STRUCTURAL ENGINEERS
225 SOUTH MAIN STREET
MONROE, OHIO 45050
PH: 513.340.0800
WWW.ASG-ENG.COM
"Value Engineering the First Time"

REV	DESCRIPTION	DATE
0	PERMIT ISSUE	08.15.23
1		
2		
3		
4		
5		
6		

PROJECT
SPECULATIVE BUILDING #5 FOR SOUTHERN KENTUCKY BUSINESS PARK
CORBIN, KENTUCKY

CLIENT
MSE, INC.
624 WELLINGTON WAY
LEXINGTON, KY. 40514
PH: 859-223-5894

FOUNDATION DETAILS

CUSTOMER JOB NO.:	
CUSTOMER:	MSE
DRAWN BY:	GSM
DATE:	08.07.23
CKD. BY:	TSM
DATE:	DATE
ASG JOB NO.	23\358
DRAWING FILENAME:	\358F2.\

DRAWING NO:

F2.1

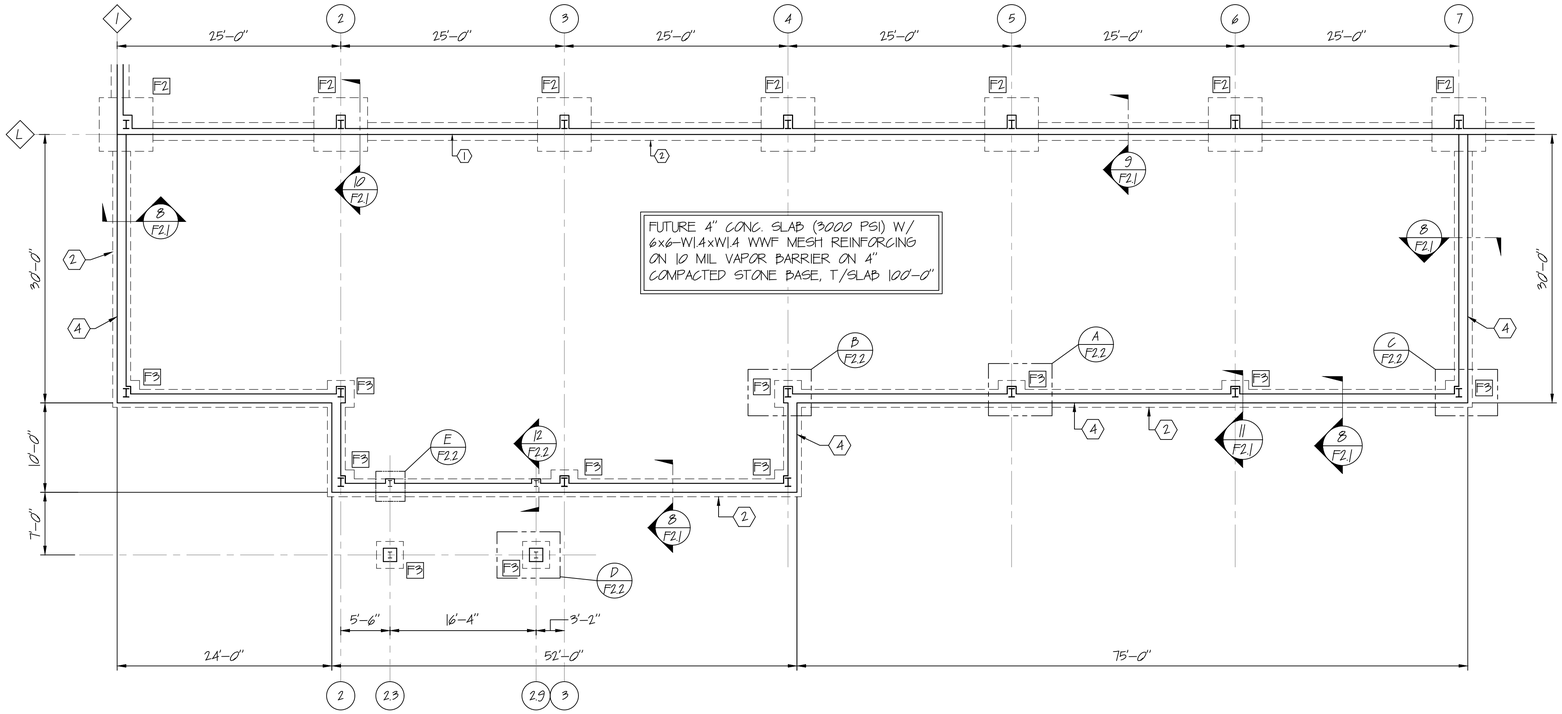

ENLARGED OFFICE FND PLAN

SCALE: 1/8" = 1'-0"

ALL COLUMNS BY PEMB SUPPLIER

DRAWING NOTES

1. 8" CONC. KNEEWALL, T/KNEEWALL = 100'-0", T/KNEEWALL = 99'-4" @ OPENINGS
2. CONC. FOOTING 2'-0" WIDE x 1'-0" HIGH W/ (3) #4's CONT. @ BTM. T/GRADE BEAM = 98'-0"
4. 12" CONC. KNEEWALL, T/KNEEWALL = 99'-4" W/ (1) COURSE OF 8" CMU W/ #4's @ 48" O.C.

FOOTING SCHEDULE

FND MARK	FND SIZE (L x B x D)	REINFORCING BOTT, E.W.	TOP OF FOOTING
F1	11'-0"x11'-0"x2'-0"	(14) - #6	97'-4"
F2	6'-0"x6'-0"x1'-0"	(7) - #5	98'-0"
F3	3'-0"x3'-0"x1'-0"	(4) - #4	98'-0"
F4	6'-0"x6'-0"x1'-0"	(7) - #5	94'-0"
F5	4'-0"x4'-0"x1'-0"	(5) - #4	98'-0"
P1	2'-0"x2'-0"x2'-0"	(8) - #5 VER	99'-4"

FOUNDATION AND FOOTING DESIGN BASED UPON A SOIL BEARING PRESSURE OF 2000 PSF PER SOILS REPORT BY CONSULTING SERVICES INC., PROJECT NO. LX150013 DATED FEB. 13, 2015.

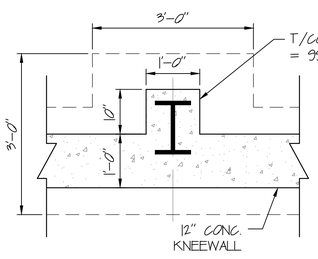

DETAIL A
SCALE: 3/4"=1'-0" F2.2

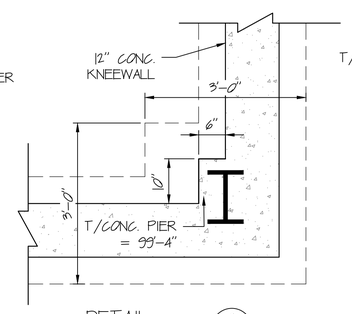

DETAIL C
SCALE: 3/4"=1'-0" F2.2

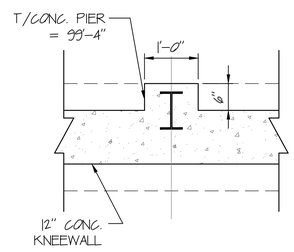

DETAIL E
SCALE: 3/4"=1'-0" F2.2

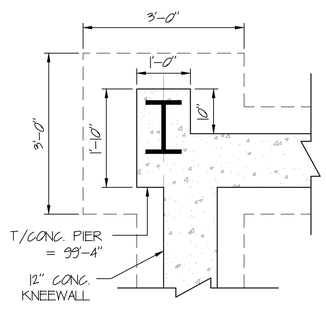

DETAIL B
SCALE: 3/4"=1'-0" F2.2

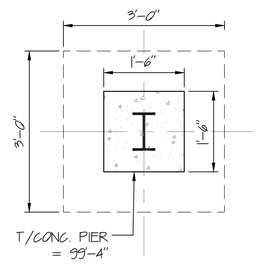

DETAIL D
SCALE: 3/4"=1'-0" F2.2

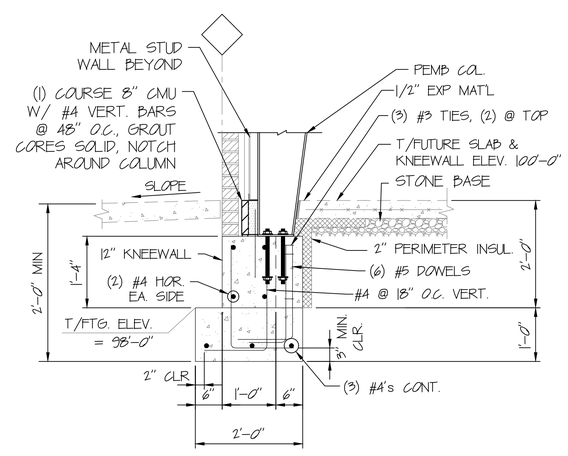

SECTION 12
SCALE: 3/4"=1'-0" F2.2

STATE OF KENTUCKY
TRACY S. MOORE
19220
REGISTERED PROFESSIONAL ENGINEER

ASG LLC
AMERICAN STRUCTURAL GROUP
CONSULTING STRUCTURAL ENGINEERS
225 SOUTH MAIN STREET
MONROE, OHIO 45050
PH 513-402-7600
WWW.ASG-ENG.COM
"Value Engineering the First Time"

REV	DESCRIPTION	DATE
0	PERMIT ISSUE	08.15.23
1		
2		
3		
4		
5		
6		

PROJECT
SPECULATIVE BUILDING #5
FOR SOUTHERN KENTUCKY BUSINESS PARK
CORBIN, KENTUCKY

CLIENT
MSE, INC.
624 WELLINGTON WAY
LEXINGTON, KY. 40504
PH: 859-223-5694

ENLARGED PLAN & DETAILS

CUSTOMER JOB NO.:	------
CUSTOMER:	MSE
DRAWN BY:	GSM
DATE:	08.07.23
CKD. BY:	TSM
DATE:	DATE
ASG JOB NO.	23|358
DRAWING FILENAME:	|358F2.2
DRAWING NO:	F2.2

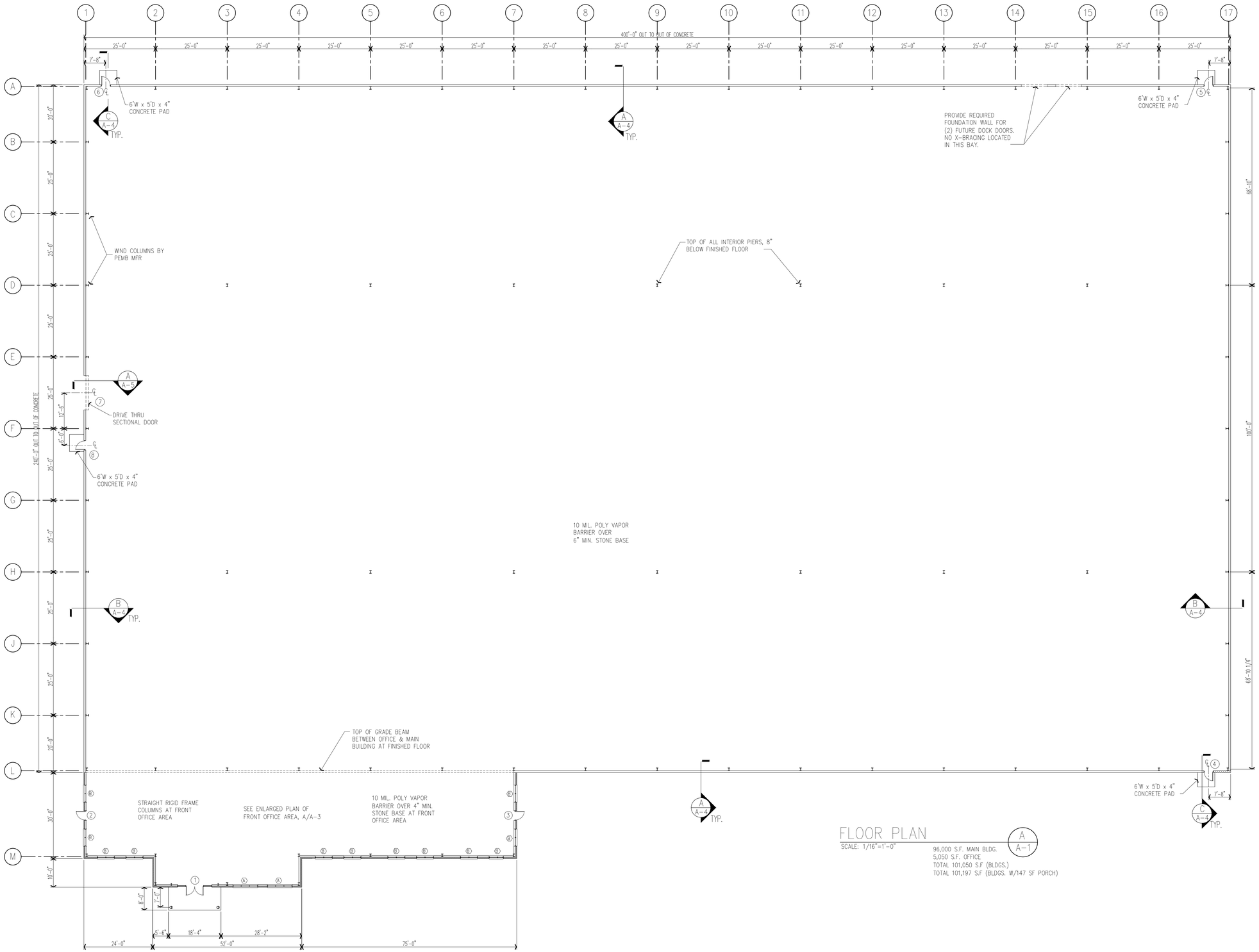

FLOOR PLAN

SCALE: 1/16"=1'-0"

96,000 S.F. MAIN BLDG.
5,050 S.F. OFFICE
TOTAL 101,050 S.F (BLDGS.)
TOTAL 101,197 S.F (BLDGS. W/147 SF PORCH)

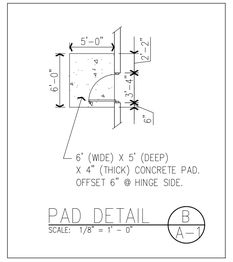

PAD DETAIL

SCALE: 1/8" = 1' - 0"

SOUTHERN KENTUCKY BUSINESS PARK
WORKING TOGETHER IN SOUTHERN KENTUCKY
Est. 1999
BELL • CLAY • KNOX • LAUREL • MCCREARY • WHITLEY

ERIC N. LOY
REGISTERED
No. 8052
COMMONWEALTH OF KENTUCKY
ARCHITECT

SPECULATIVE BUILDING #5
FOR
SOUTHERN KENTUCKY BUSINESS PARK
CORBIN, KENTUCKY

DATE	REVISION	BY

DESIGN DOCUMENTS
The design professional waives any and all responsibility and liability for problems which arise from failure to follow these plans, specifications and the design intent they convey.

COPYRIGHT ©
The information and data disclosed subject matter considered confidential by MSE of Kentucky, Inc. and on which MSE of Kentucky, Inc. has property rights. Neither receipt nor possession thereof confers or transfer any right in or license to the subject matter disclosed or the design, manufacture, reproduction, use or sale of anything related thereto to others, or to use it for any purpose without the written permission of MSE of Kentucky, Inc.

PROJECT NO.	2063-81
DESIGNED BY	ENL/BLL
DRAWN BY	ENL/BLL
CHECKED BY	
REVIEWED BY	
DATE	AUGUST 2023
SCALE	AS NOTED

MSE
Engineers
Architects
Planners
OF KENTUCKY, INC.
624 Wellington Way
Lexington, KY 40503
www.mseilex.com
Phone: (859)223-5694
Fax: (859)223-2607

DRAWING NO.

A-1

SHEET OF

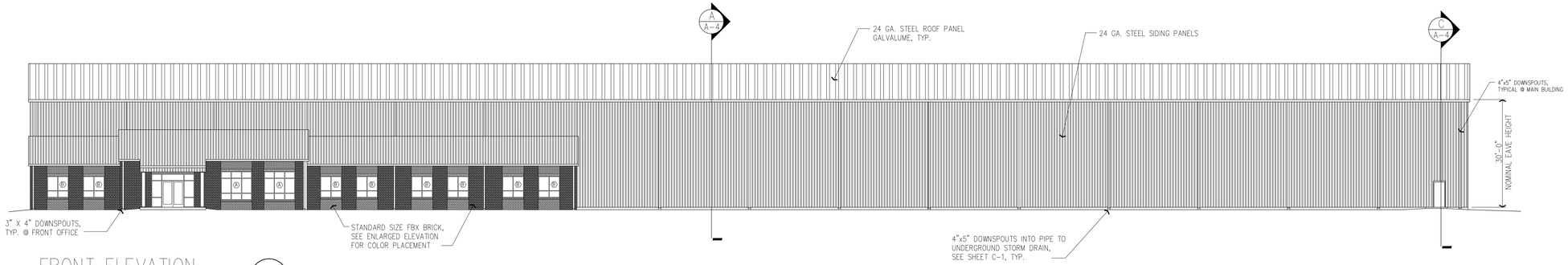

FRONT ELEVATION (A / A-2)
SCALE: 1/16"=1'-0"

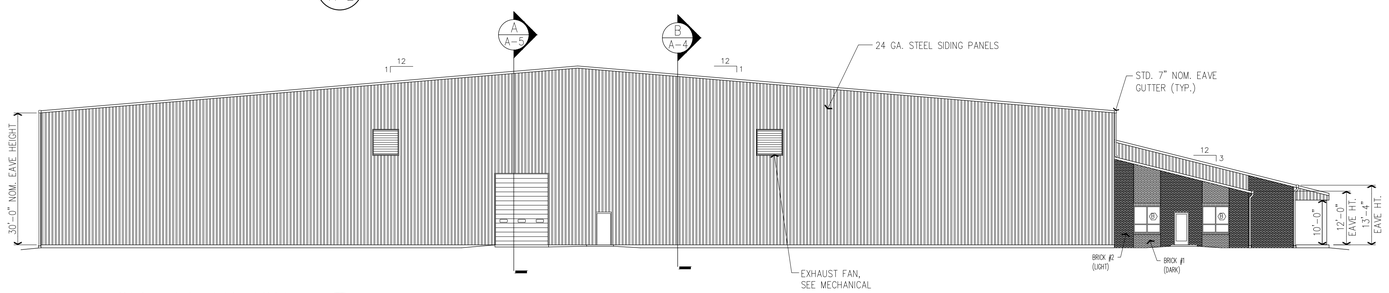

LEFT SIDE ELEVATION (B / A-2)
SCALE: 1/16"=1'-0"

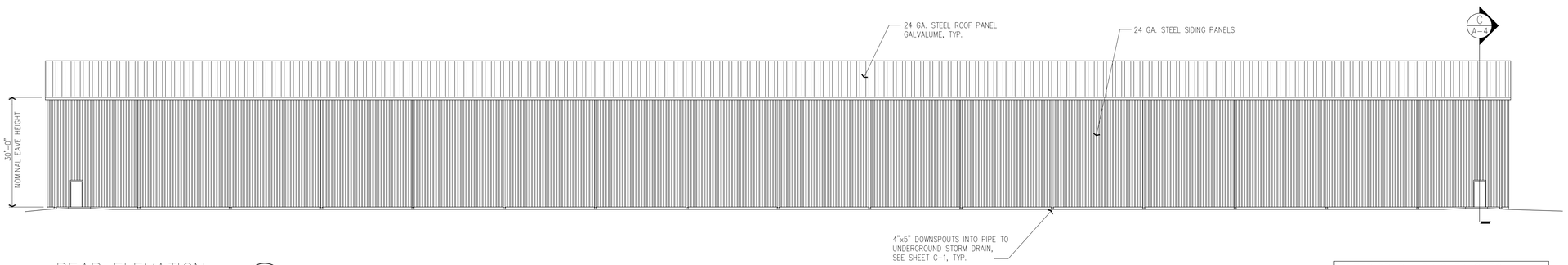

REAR ELEVATION (C / A-2)
SCALE: 1/16"=1'-0"

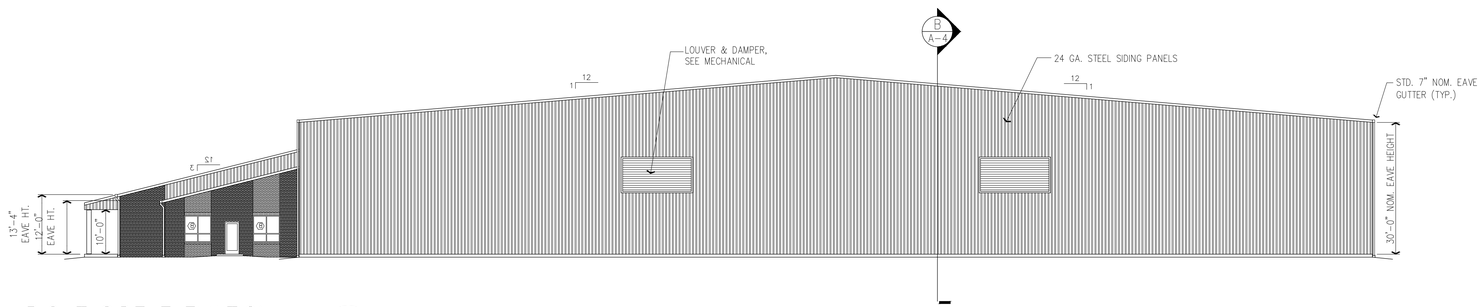

RIGHT SIDE ELEVATION (D / A-2)
SCALE: 1/16"=1'-0"

EXTERIOR BUILDING FINISHES

FRONT OFFICE

- WALL PANELS – 26 GA. STEEL SIDING PANELS, COLOR "SURREY BEIGE", KYNAR 500 FINISH, OR APPROVED EQUAL.
- ROOF PANELS – 24 GA. STEEL ROOF PANELS, COLOR "ROYAL BLUE", KYNAR 500 FINISH, OR APPROVED EQUAL.
- TRIM & GUTTERS – COLOR "SURREY BEIGE", DOWNSPOUTS – COLOR "SURREY BEIGE", OR APPROVED EQUAL.
- ALL WINDOW AND DOOR GLAZING, SEE PLAN SHEET A-7
- ALL WINDOW AND DOOR FRAMES TO BE DARK BRONZE FINISH
- BRICK #1 – STD. SIZE FBX BRICK, BELDEN BRICK "MODULAR JEWEL CLEAR A" w/ flamingo BRIXMENT C-31 TERRA COTTA MORTAR.
- BRICK #2 – STD. SIZE FBX BRICK, BELDEN BRICK "MODULAR CLARET VELOUR" w/ flamingo BRIXMENT C-29 FIG MORTAR.
- BRICK #3 – STD. SIZE FBX BRICK, BELDEN BRICK "MODULAR SEA GRAY VELOUR A" w/ flamingo BRIXMENT C-320 BOSTON CREME MORTAR.
- COLUMN COVERS – UNA-CLAD "SURREY BEIGE", KYNAR 500 FINISH OR APPROVED EQUAL

MAIN BUILDING

- WALL PANELS – 26 GA. STEEL SIDING PANELS, COLOR "SURREY BEIGE", KYNAR 500 FINISH, OR APPROVED EQUAL.
- ROOF PANELS – 24 GA. STEEL ROOF PANELS, GALVALUME FINISH
- TRIM, GUTTERS AND DOWNPOUTS – COLOR "SURREY BEIGE", OR APPROVED EQUAL.
- HOLLOW METAL DOORS/FRAMES AND SECTIONAL DOOR – SURREY BEIGE

NOTE: Finish colors noted are brand specific and may be substituted with architect approved equal.

FOUNDATION NOTES:

- SEE SPECIFICATIONS, SECTION 02200, FOR EARTHWORK REQUIREMENTS.
- BOTTOM OF EXTERIOR WALL FOOTINGS SHALL EXTEND A MINIMUM OF 2'-6" BELOW OUTSIDE FINISH GRADE.
- ALL EXTERIOR AND INTERIOR WALL FOOTINGS OF THE SAME BUILDING SHALL BE SUPPORTED IN THE SAME TYPE OF MATERIAL, I.E. UNDISTURBED SOIL, CONTROLLED, COMPACTED FILL OR ROCK.
- ALL INTERIOR WALL FOOTINGS SHALL BE EITHER THICKENED, REINFORCED SLABS OR TYPICAL CONCRETE BLOCK WALLS ON REINFORCED CONCRETE PROVIDED THEY ARE SUPPORTED IN THE SAME TYPE OF MATERIALS AS EXTERIOR WALL FOOTINGS.
- WHERE FOOTINGS ARE SUPPORTED IN UNDISTURBED SOIL OR CONTROLLED, COMPACTED FILL AND ROCK IS ENCOUNTERED, UNDERCUT ROCK A MINIMUM OF 24" AND BACKFILL WITH CONTROLLED, COMPACTED FILL.
- WHERE FOOTINGS ARE SUPPORTED IN CONTROLLED, COMPACTED FILL AND UNDISTURBED SOIL IS ENCOUNTERED, UNDERCUT UNDISTURBED SOIL A MINIMUM OF 18" AND BACKFILL WITH CONTROLLED, COMPACTED FILL.
- WHERE FOOTINGS ARE SUPPORTED IN UNDISTURBED SOIL, BOTTOM OF FOOTINGS SHALL BE A MINIMUM OF 6" INTO THE UNDISTURBED SOIL LAYER WHICH WILL PROVIDE ADEQUATE BEARING CAPACITY.
- WHERE APPLICABLE, FOOTING STEPS SHALL NOT EXCEED A RATIO OF ONE VERTICAL UNIT TO TWO HORIZONTAL UNITS. WHERE APPLICABLE, INTERIOR WALL FOOTINGS SHALL STEP TO MEET ELEVATIONS OF EXTERIOR WALL FOOTINGS.

FOUNDATION EXCAVATION

- SOILS EXPOSED IN THE BOTTOM OF ALL FOUNDATION EXCAVATIONS SHOULD BE PROTECTED AGAINST ANY DETRIMENTAL CHANGE IN CONDITION SUCH AS DISTURBANCE, RAIN, OR FREEZING. THIS IS ESPECIALLY IMPORTANT GIVEN THE CAPABILITY OF THE RESIDUAL SOILS TO ABSORB WATER, AND AS A RESULT, LOSE A SUBSTANTIAL PERCENTAGE OF THEIR STRENGTH. SURFACE RUNOFF SHOULD BE DIRECTED AWAY FROM SUCH EXCAVATIONS AND NOT BE PERMITTED TO POND. OPTIMUM PROTECTION CAN BEST BE ACHIEVED IF ALL FOOTING CONCRETE IS POURED THE SAME DAY THE EXCAVATION IS MADE. IF THIS IS NOT PRACTICAL, THE FOOTING EXCAVATIONS PROPOSED STRUCTURE SHOULD BE SLOPED IN A MANNER THAT WILL PROVIDE POSITIVE DRAINAGE AWAY FROM THE STRUCTURE.
  PLACE A MINIMUM OF FOUR INCHES OF CRUSHED STONE AGGREGATE UNDER ALL CONCRETE SLABS-ON-GRADE.

NOTE TO CONTRACTOR

- THE CONTRACTOR IS TO COORDINATE THE STRUCTURAL DRAWINGS WITH THE ARCHITECTURAL, ELECTRICAL AND MECHANICAL DRAWINGS AND BE CERTAIN ALL PIPES, SLEEVES, DUCTS, INSERTS AND HOLES ARE LOCATED AND IN PLACE BEFORE EACH CONCRETE POUR.
- THE CONTRACTOR SHALL CHECK AND APPROVE WITH REASONABLE PROMPTNESS, SHOP DRAWINGS, AND SCHEDULES FOR COORDINATION OF DETAILS, SIZES, FILLING TOLERANCES AND DIMENSIONS. THE CONTRACTOR SHALL STAMP OR SIGN THESE DRAWINGS AND SCHEDULES WITH HIS APPROVAL AND THEN SUBMIT THEM TO THE ARCHITECT FOR REVIEW.

ERIC N. LOY
REGISTERED
No 8052
COMMONWEALTH OF KENTUCKY
ARCHITECT

SPECULATIVE BUILDING #5
FOR
SOUTHERN KENTUCKY BUSINESS PARK
CORBIN, KENTUCKY

DATE	REVISION	BY

DESIGN DOCUMENTS
The design professional waives any and all responsibility and liability for problems which arise from failure to follow these plans, specifications and the design intent they convey.

Copyright ©
Ownership of disclosures subject matter considered confidential by MSE of Kentucky, Inc. and on which MSE of Kentucky, Inc. has property rights. Neither receipt nor possession thereof confers or transfer any right to reproduce or disclose the information contained therein to others, or to use it for any purpose without the written permission of MSE of Kentucky, Inc.

PROJECT NO.	2063-81
DESIGNED BY	ENL/BLL
DRAWN BY	ENL/BLL
CHECKED BY	
REVIEWED BY	
DATE	AUGUST 2023
SCALE	AS NOTED

MSE OF KENTUCKY, INC.
Engineers
Architects
Planners
624 Wellington Way
Lexington, KY 40503
www.mselex.com
Phone: (859)223-5594
Fax: (859)223-2607

DRAWING NO.
A-2
SHEET OF

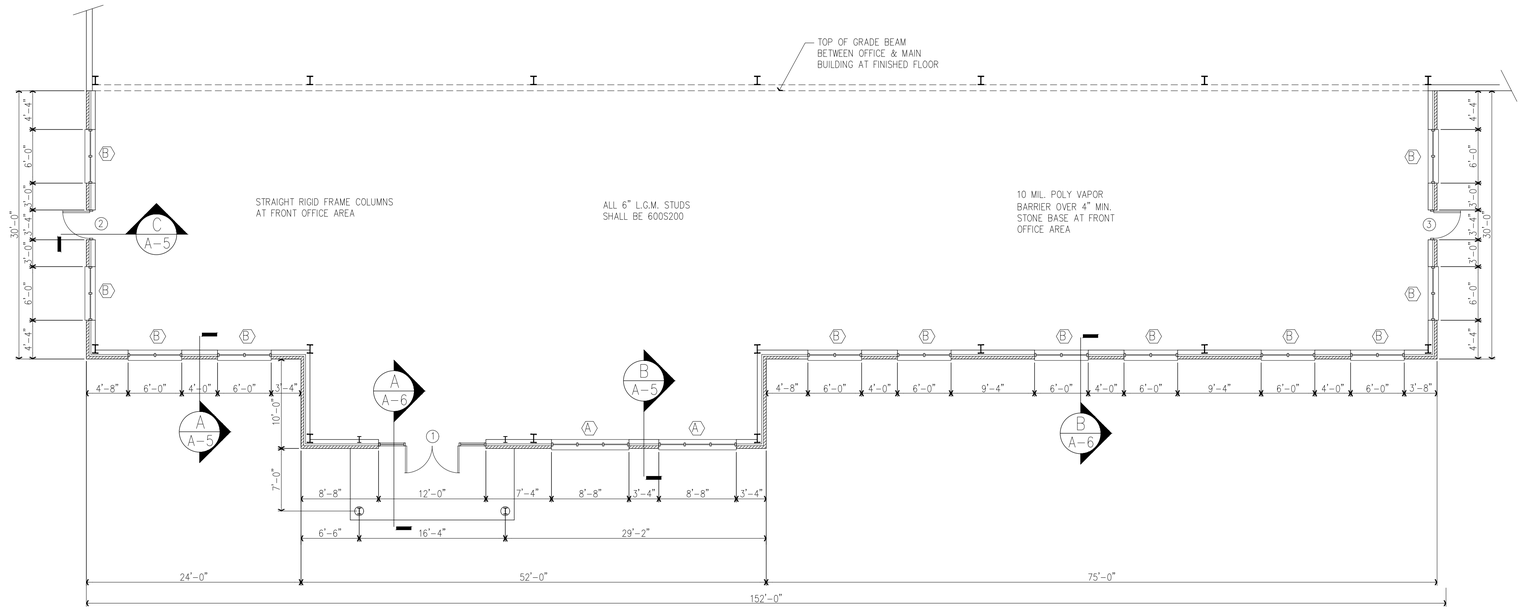

ENLARGED FLOOR PLAN @ FRONT OFFICE

SCALE: 1/8" = 1'-0"

A / A-3

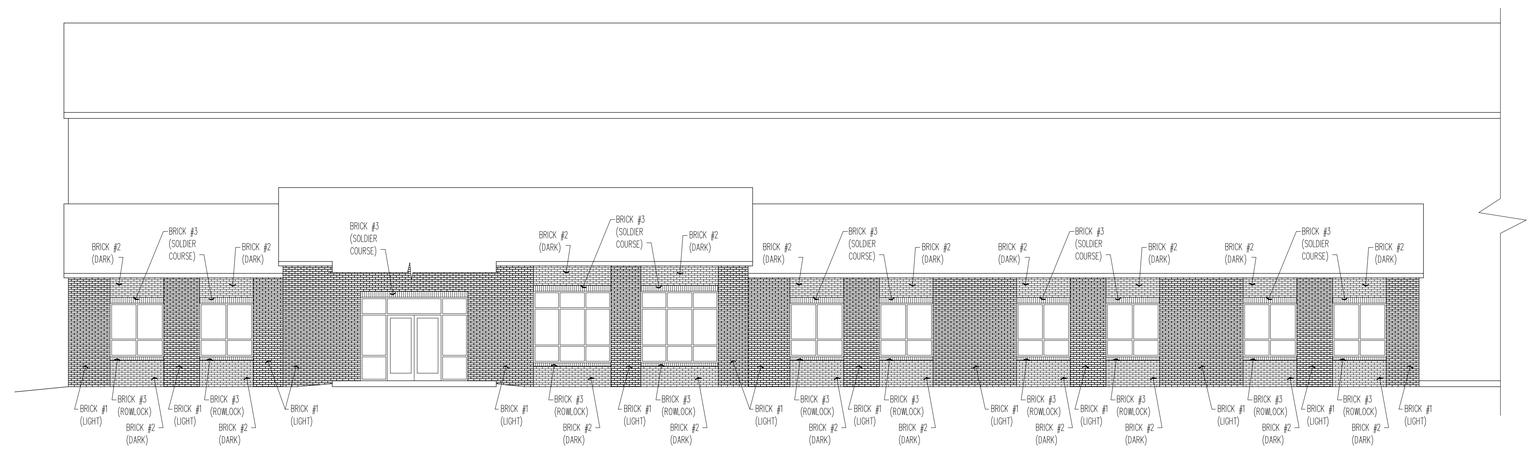

ENLARGED ELEVATION @ FRONT OFFICE

SCALE: 1/8" = 1'-0"

B / A-3

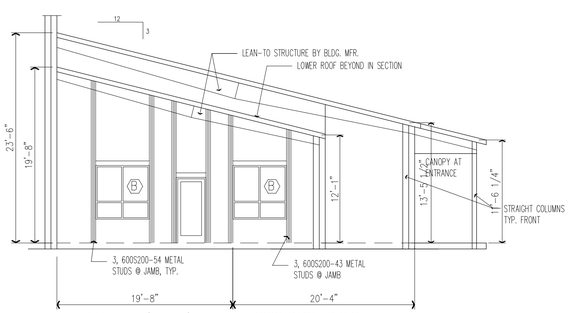

SECTIONS OF FRAMING @ FRONT OFFICE

SCALE: 1/8" = 1'-0"

C / A-3

ERIC N. LEY
REGISTERED
No. 8052
COMMONWEALTH OF KENTUCKY
ARCHITECT

SPECULATIVE BUILDING #5
FOR
SOUTHERN KENTUCKY BUSINESS PARK
CORBIN, KENTUCKY

DATE	REVISION	BY

DESIGN DOCUMENTS
The design professional waives any and all responsibility and liability for problems which arise from failure to follow these plans, specifications and the design intent they convey.

COPYRIGHT ©
The design and data disclosures subject matter considered confidential by MSE of Kentucky, Inc. and on which MSE of Kentucky, Inc. has proprietary rights. Neither receipt nor possession thereof confers or transfer any right in or license to the subject matter disclosed or the design, manufacture, production, construction or assembly of any thereof to others, or to use it for any purpose without the written permission of MSE of Kentucky, Inc.

PROJECT NO.	2063-81
DESIGNED BY	ENL/BLL
DRAWN BY	ENL/BLL
CHECKED BY	
REVIEWED BY	
DATE	AUGUST 2023
SCALE	AS NOTED

MSE OF KENTUCKY, INC.
Engineers
Architects
Planners
624 Wellington Way
Lexington, KY 40503
www.mseilex.com
Phone: (859)223-5694
Fax: (859)223-2607

DRAWING NO.

A — 3

SHEET OF

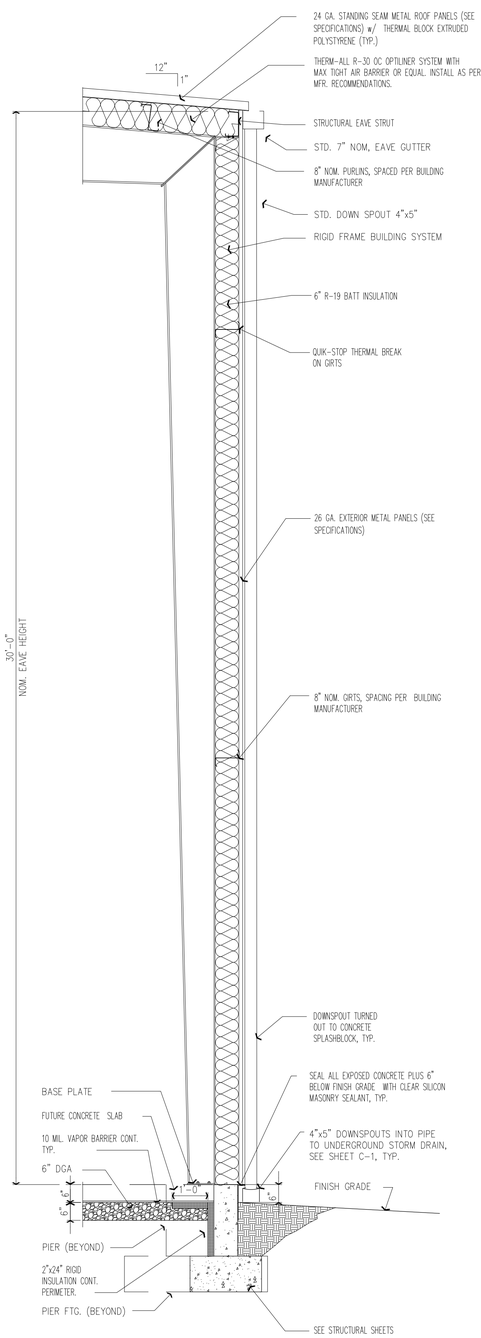

WALL SECTION -EAVE (A / A-4)

SCALE: 1/2" = 1' - 0"

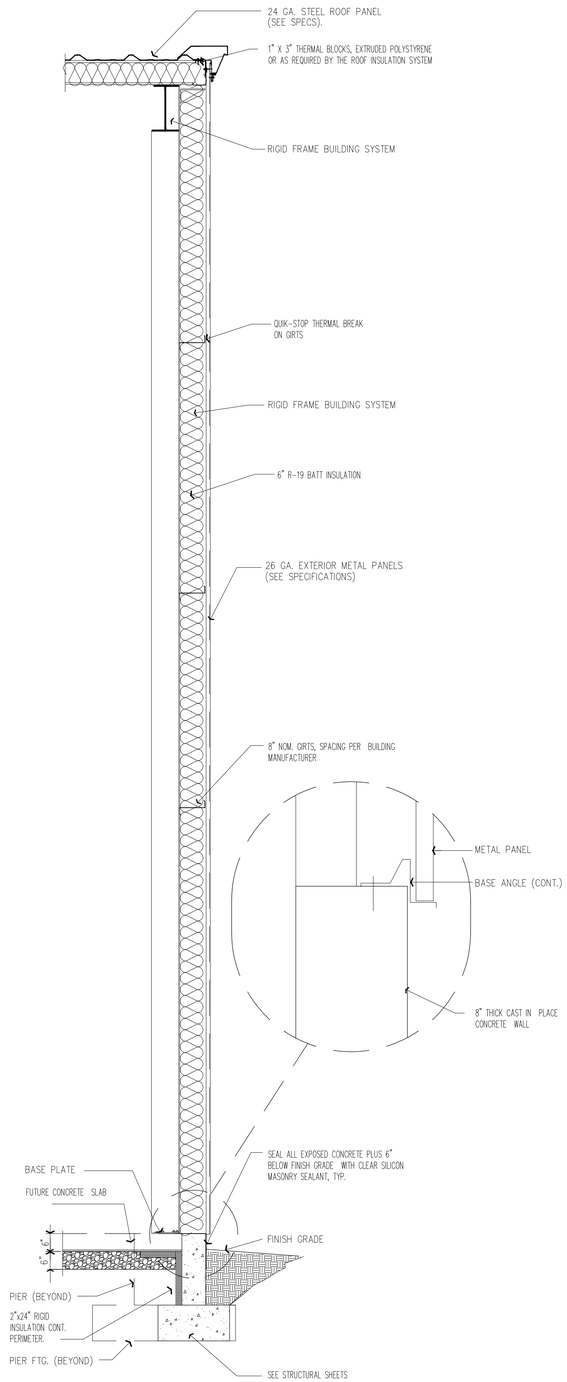

WALL SECTION - GABLE (B / A-4)

SCALE: 1/2" = 1' - 0"

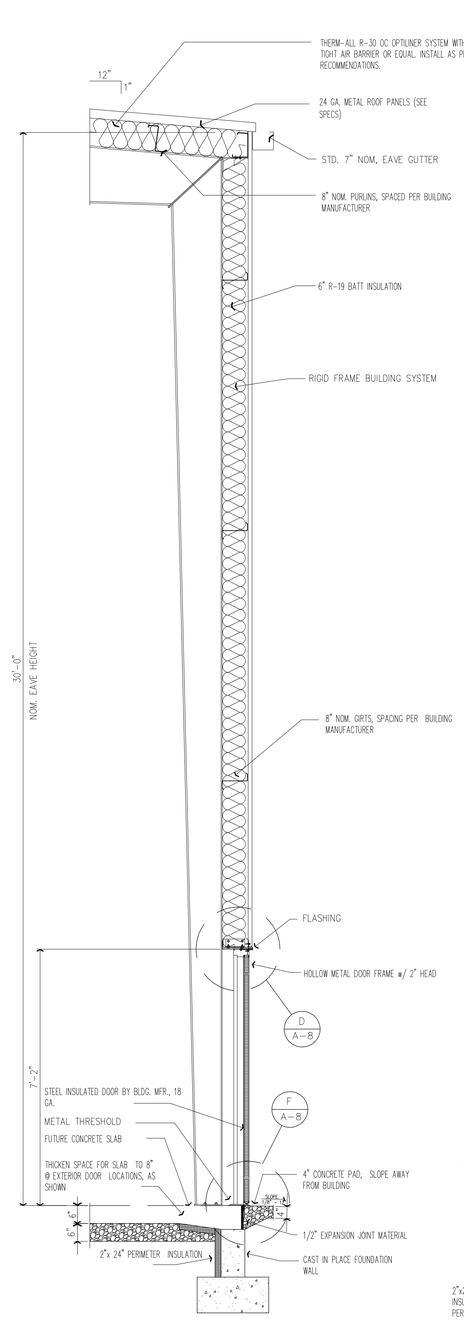

WALL SECTION @ DOOR (C / A-4)

SCALE: 1/2" = 1' - 0"

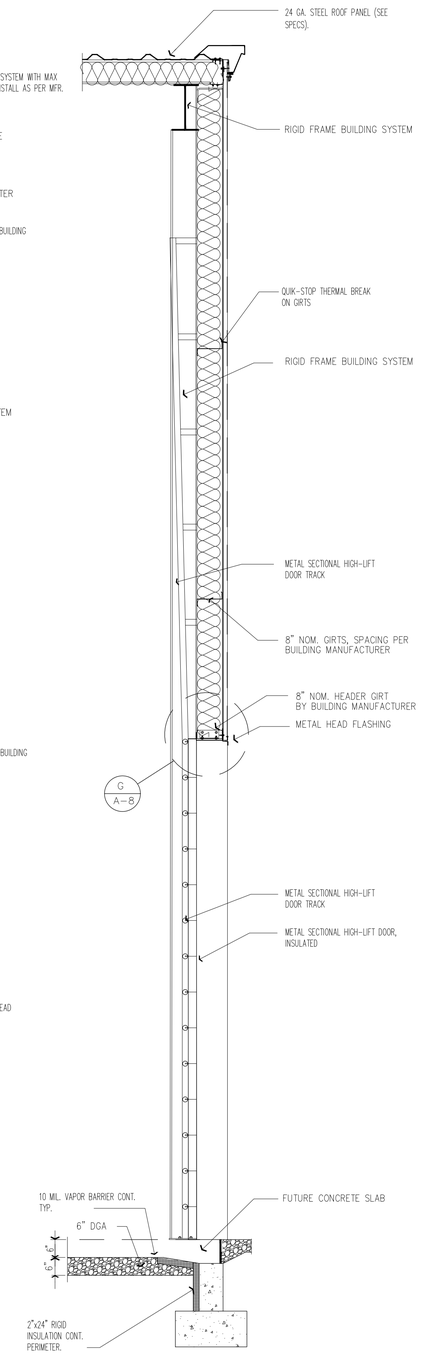

WALL SECTION @ SEC. DOOR (D / A-4)

SCALE: 1/2" = 1' - 0"

ERIC N. LOY REGISTERED No 8052 COMMONWEALTH OF KENTUCKY ARCHITECT

SPECULATIVE BUILDING #5
FOR
SOUTHERN KENTUCKY BUSINESS PARK
CORBIN, KENTUCKY

DATE	REVISION	BY

DESIGN DOCUMENTS
The design professional waives any and all responsibility and liability for problems which arise from failure to follow these plans, specifications and the design intent they convey.

Copyright ©
The information on this page discloses subject matter considered confidential by MSE of Kentucky, Inc. and on which MSE of Kentucky, Inc. has property rights. Neither receipt nor possession thereof confers or transfer any right to reproduce, use or disclose the information contained herein, in whole or in part, for any purpose other than that for which it is disclosed, or to disclose it to others, or to use it for any purpose without the written permission of MSE of Kentucky, Inc.

PROJECT NO.	2063-81
DESIGNED BY	ENL/BLL
DRAWN BY	ENL/BLL
CHECKED BY	
REVIEWED BY	
DATE	AUGUST 2023
SCALE	AS NOTED

MSE OF KENTUCKY, INC.
Engineers
Architects
Planners
624 Wellington Way
Lexington, KY 40503
www.mseilex.com
Phone: (859)223-5694
Fax: (859)223-2607

DRAWING NO.

A-4

SHEET OF

BRICK LINTEL SCHEDULE		
MASONRY OPENING SIZE	WALL TYPES BRICK (4" NOM.)	REMARKS
>2'-0" TO 4'-0"	L 4" x 4" x 5/16	
>4'-0" TO 6'-0"	L 4" x 4" x 3/8"	
> 6'-0" TO 8'-0"	L 6" x 4" x 3/8"	
> 8'-0" TO 12-0"	L 7" x 4" x 3/8" LLV	

GENERAL NOTES:

1. INSTALL LINTEL ANGLES FOR MASONRY OPENINGS IN ACCORDANCE WITH SCHEDULE ABOVE. INSTALL LONG LEG OF ANGLE VERTICAL.
2. PROVIDE 6" MINIMUM BEARING FOR S1L ANGLE SUPPORTING BRICK VENEER ON EACH END.
3. WHERE MINIMUM BEARING CAN NOT BE PROVIDED, ATTACH SECURELY TO ADJACENT STRUCTURAL MEMBERS OR PROVIDE SEPARATE SUPPORTS.

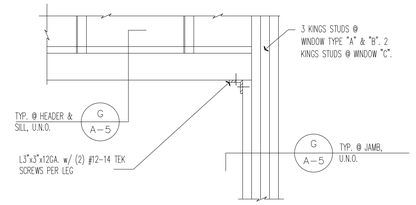

TYP. @ WINDOW AND DOOR OPENINGS, U.N.O.

SECTION E/A-5
SCALE: 3/4" = 1' - 0"

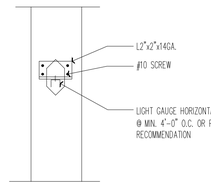

TYP. @ L.G.M. HORIZONTAL BRACING, U.N.O.

SECTION F/A-5
SCALE: 3/4" = 1' - 0"

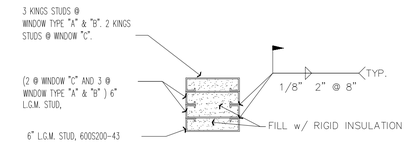

TYP. @ JAMB, U.N.O.

SECTION G/A-5
SCALE: 3/4" = 1' - 0"

WALL & ACCESSORIES NOT SHOWN FOR CLARITY

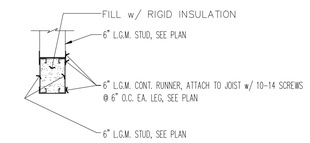

TYP. @ HEADER, U.N.O.

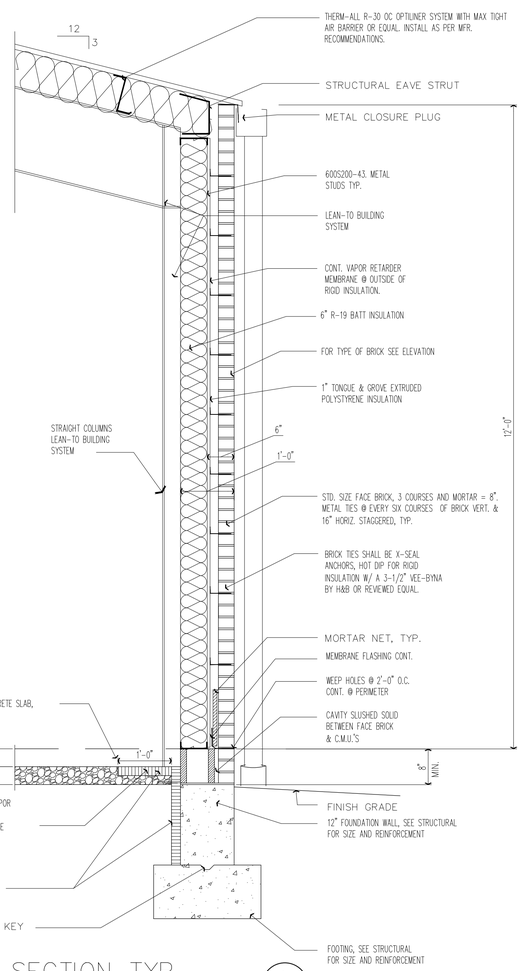

WALL SECTION TYP. A/A-5
SCALE: 3/4" = 1' - 0"

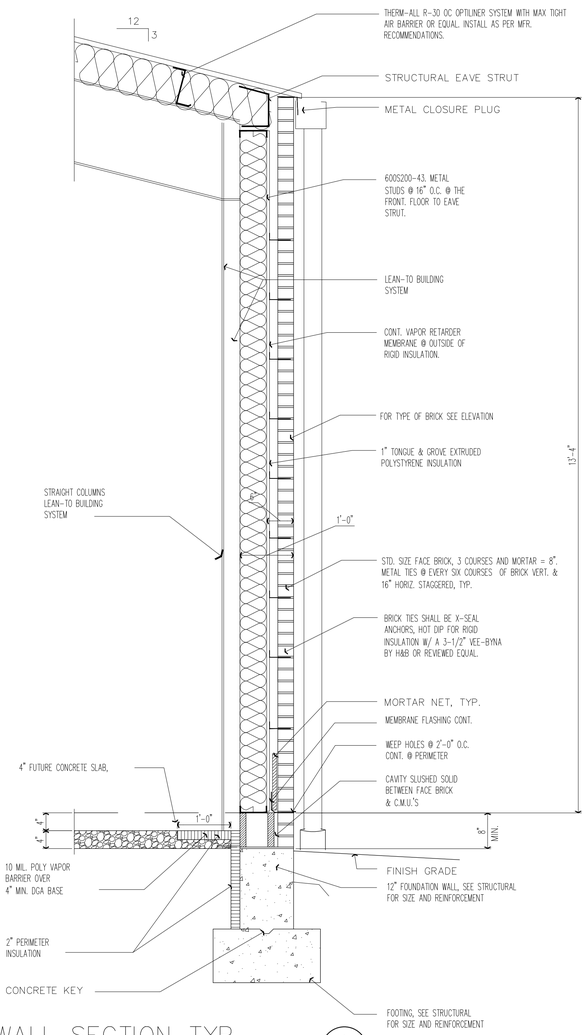

WALL SECTION TYP. B/A-5
SCALE: 3/4" = 1' - 0"

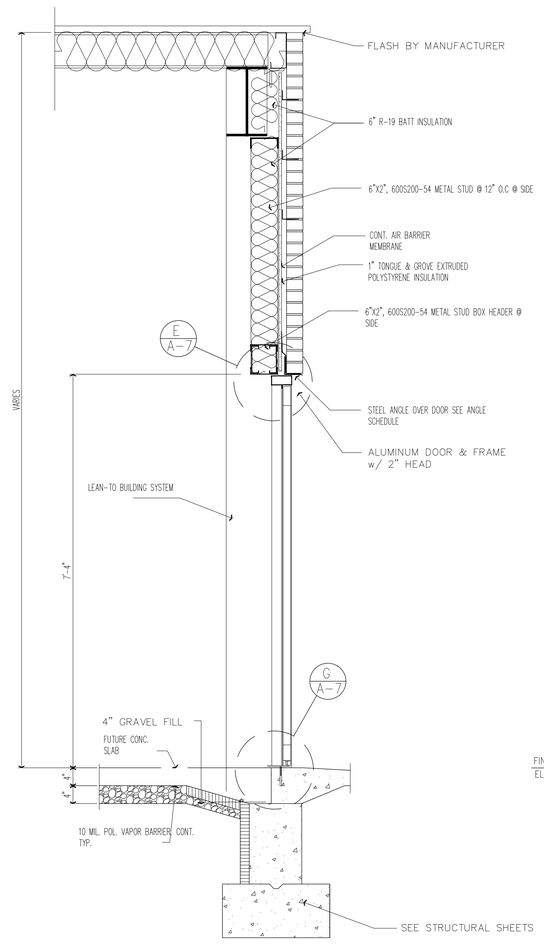

WALL SECTION @ OFFICE C/A-5
SCALE: 3/4" = 1' - 0"

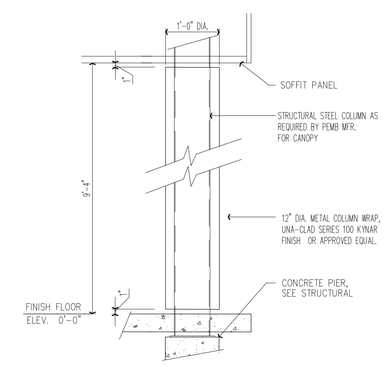

(@ CONC. PAD LOCATIONS)

COLUMN WRAP DETAIL D/A-5
SCALE: 3/4" = 1' - 0"

ERIC N. LOY
REGISTERED
No. 8052
COMMONWEALTH OF KENTUCKY
ARCHITECT

SPECULATIVE BUILDING #5
FOR
SOUTHERN KENTUCKY BUSINESS PARK
CORBIN, KENTUCKY

DATE	REVISION	BY

DESIGN DOCUMENTS
The design professional waives any and all responsibility and liability for problems which arise from failure to follow these plans, specifications and the design intent they convey.
COPYRIGHT ©
The information on this page discloses subject matter considered confidential by MSE of Kentucky, Inc. and on which MSE of Kentucky, Inc. has property rights. Neither receipt nor possession thereof confers or transfer any right to reproduce, use or disclose the information contained herein, in whole or in part, for any purpose other than that for which it is furnished by MSE of Kentucky, Inc.

PROJECT NO.	2063-81
DESIGNED BY	ENL/BLL
DRAWN BY	ENL/BLL
CHECKED BY	
REVIEWED BY	
DATE	AUGUST 2023
SCALE	AS NOTED

MSE OF KENTUCKY, INC.
Engineers
Architects
Planners
624 Wellington Way
Lexington, KY 40503
www.mseilex.com
Phone: (859)223-5694
Fax: (859)223-2607

DRAWING NO.
A-5
SHEET OF

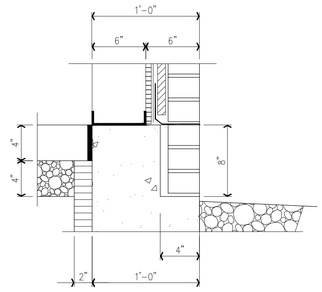

DIMENSIONAL RELATIONSHIP

SCALE: 1-1/2" = 1' - 0"

D / A-6

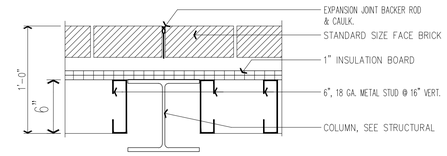

CONTROL JOINT DETAIL

SCALE: 1 1/2" = 1' - 0"

E / A-6

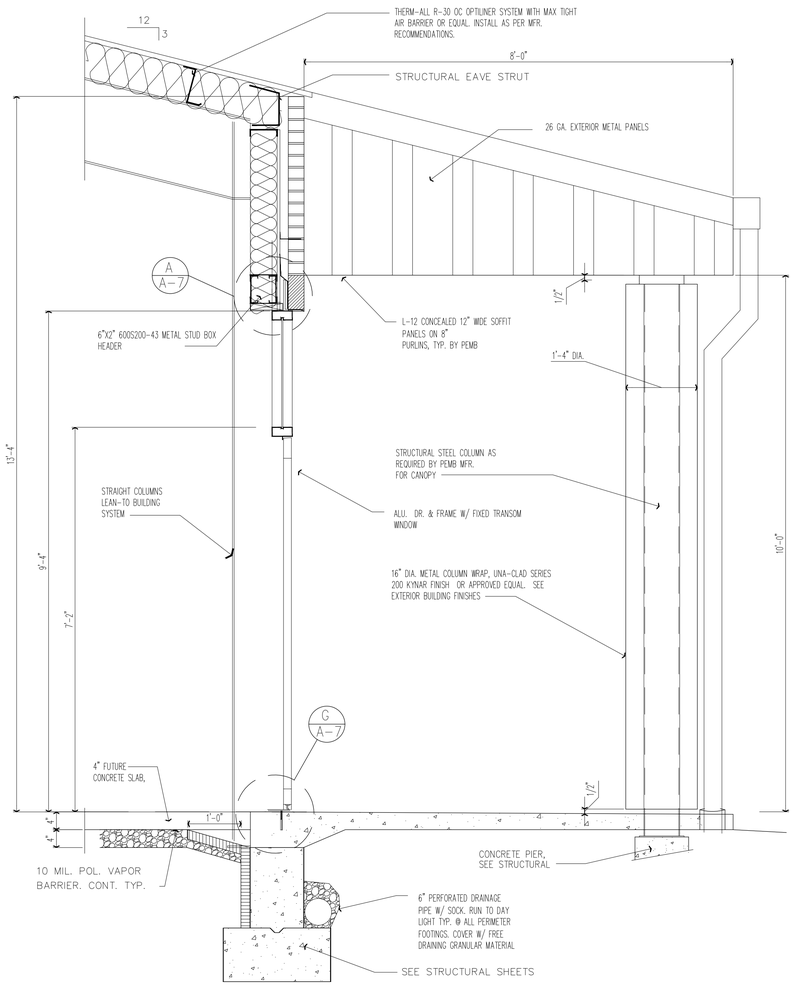

WALL SECTION TYP.

SCALE: 3/4" = 1' - 0"

A / A-6

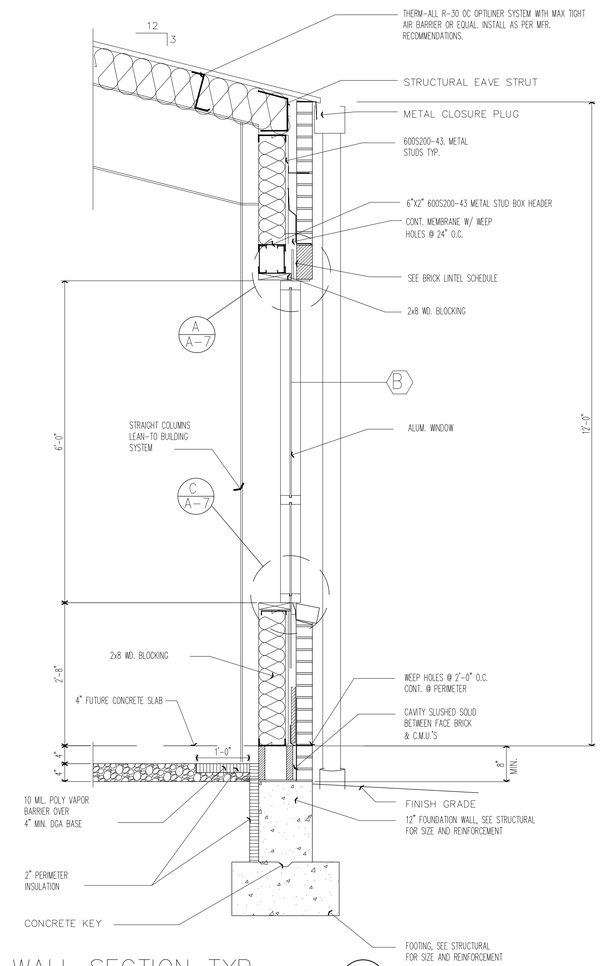

WALL SECTION TYP.

SCALE: 3/4" = 1' - 0"

A / A-6

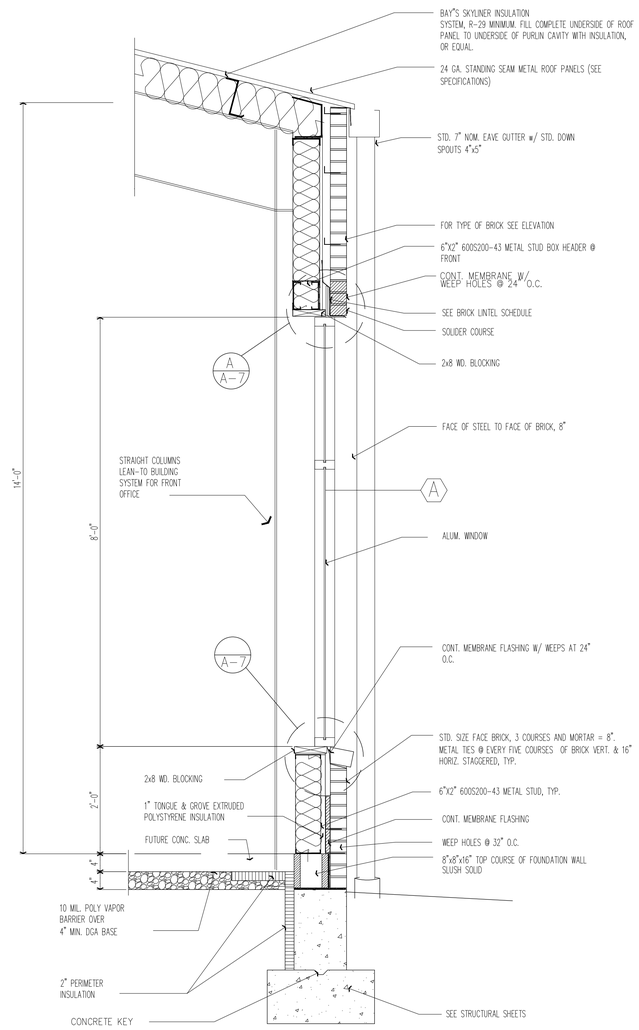

WALL SECTION @ OFFICE

SCALE: 3/4" = 1' - 0"

C / A-6

ERIC N. LEY
REGISTERED
No. 8052
COMMONWEALTH OF KENTUCKY
ARCHITECT

SPECULATIVE BUILDING #5
FOR
SOUTHERN KENTUCKY BUSINESS PARK
CORBIN, KENTUCKY

DATE	REVISION	BY

DESIGN DOCUMENTS
The design professional waives any and all responsibility and liability for problems which arise from failure to follow these plans, specifications and the design intent they convey.

COPYRIGHT ©
These documents contain ideas and designs subject matter considered confidential by MSE of Kentucky, Inc. and on which MSE of Kentucky, Inc. has property rights. Neither receipt nor possession thereof confers or transfer any right in or license to use the ideas and designs furnished herein or to reproduce them in whole or in part, or to use them for any purpose or to give them to others, or to use it for any purpose without the written permission of MSE of Kentucky, Inc.

PROJECT NO.	2063-81
DESIGNED BY	ENL/BLL
DRAWN BY	ENL/BLL
CHECKED BY	
REVIEWED BY	
DATE	AUGUST 2023
SCALE	AS NOTED

MSE OF KENTUCKY, INC.
Engineers
Architects
Planners
624 Wellington Way
Lexington, KY 40503
www.mselex.com
Phone: (859)223-5694
Fax: (859)223-2607

DRAWING NO.

A-6

SHEET OF

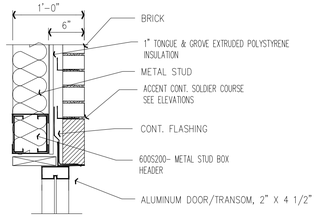

EXTERIOR ALUM. DR. HEAD (A / A-7)
SCALE: 1" = 1' - 0"

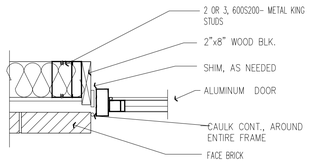

EXTERIOR ALUM. DR. JAMB (B / A-7)
SCALE: 1" = 1' - 0"

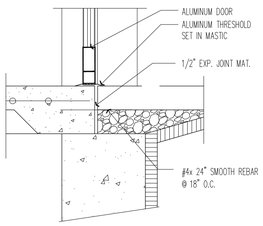

DOOR THRESHOLD (C / A-7)
SCALE: 1" = 1' - 0"

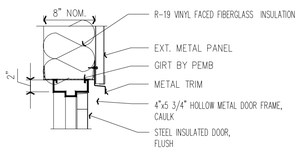

EXTERIOR DOOR HEAD (D / A-7)
SCALE: 1" = 1' - 0"

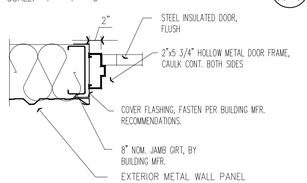

DOOR JAMB (E / A-7)
SCALE: 1" = 1' - 0"

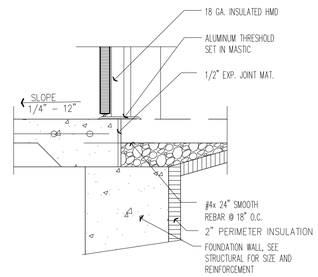

DOOR THRESHOLD (F / A-7)
SCALE: 1" = 1' - 0"

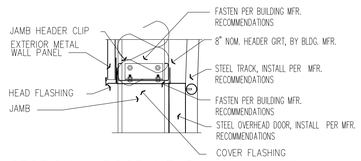

SECTIONAL DOOR HEAD (G / A-7)
SCALE: 1" = 1' - 0"

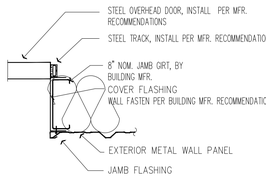

SECTIONAL DOOR JAMB (H / A-7)
SCALE: 1" = 1' - 0"

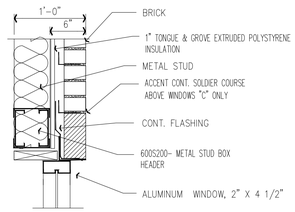

WINDOW HEAD IN BRICK (J / A-7)
SCALE: 1" = 1' - 0"

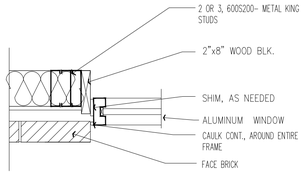

WINDOW JAMB IN BRICK (K / A-7)
SCALE: 1" = 1' - 0"

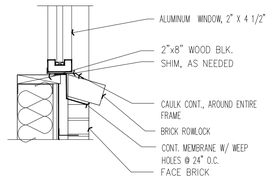

WINDOW SILL IN BRICK (L / A-7)
SCALE: 1" = 1' - 0"

DOOR SCHEDULE, FIRST FLOOR

DOOR NO.	DOOR TYPE	DOOR MATERIAL	DOOR WIDTH	DOOR HEIGHT	DOOR THICK.	FRAME TYPE	FRAME HEAD	FRAME JAMB	FRAME SILL	REMARKS
1	A	ALUM.	3'-0"	7'-2"	-----	1	A SIM.	B	C	STOREFRONT FRAME
2	A	ALUM.	3'-0"	7'-2"	-----	1	A	B	C	STOREFRONT FRAME
3	A	ALUM.	3'-0"	7'-2"	-----	1	A	B	C	STOREFRONT FRAME
4	B	H.M.	3'-0"	7'-0"	1 3/4"	2	D	E	F	
5	B	H.M.	3'-0"	7'-0"	1 3/4"	2	D	E	F	
6	B	H.M.	3'-0"	7'-0"	1 3/4"	2	D	E	F	
7	C	SECT.OH	12'-0"	16'-0"	-----	-----	G	H	----	INSULATED SECTIONAL O.H.DOOR
8	B	H.M.	3'-0"	7'-0"	1 3/4"	2	D	E	F	

SEE SPEC. SECTION 08710 FOR HARDWARE SETS

DOOR TYPES:
SCALE 1/4"" = 1' - 0"

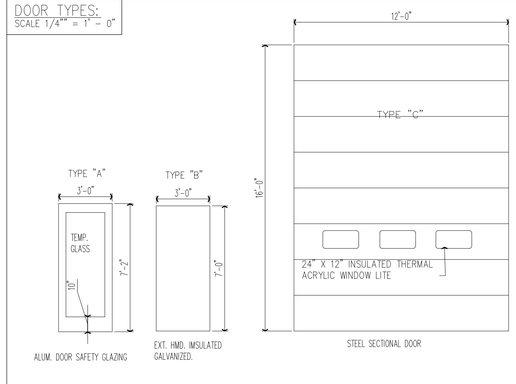

DOOR FRAMES:
SCALE 1/4"" = 1' - 0"

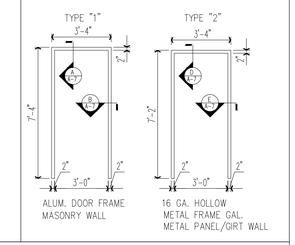

WINDOW FRAMES:
SCALE 1/4"" = 1' - 0"

ALL GLASS GLAZED BY KBC

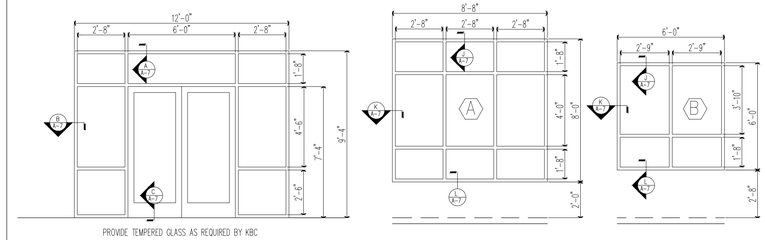

ERIC N. LOY REGISTERED No 8052 COMMONWEALTH OF KENTUCKY ARCHITECT

SPECULATIVE BUILDING #5
FOR
SOUTHERN KENTUCKY BUSINESS PARK
CORBIN, KENTUCKY

DATE	REVISION	BY

DESIGN DOCUMENTS
The design professional waives any and all responsibility and liability for problems which arise from failure to follow these plans, specifications and the design intent they convey.
COPYRIGHT ©
MSE of Kentucky, Inc. has property rights. Neither receipt nor possession thereof confers or transfer any right in or license to reproduce, display, vary, modify, or delivery these documents without the express written permission of MSE of Kentucky, Inc. Neither receipt nor possession thereof confers or transfer any right in or license to use these documents for any purpose whatsoever without the express written permission of MSE of Kentucky, Inc. and on which rights are reserved. Neither possession thereof nor disclosure thereof by MSE of Kentucky, Inc. to others, or to use it for any purpose without the written permission of MSE of Kentucky, Inc.

PROJECT NO.	2063-81
DESIGNED BY	ENL/BLL
DRAWN BY	ENL/BLL
CHECKED BY	
REVIEWED BY	
DATE	AUGUST 2023
SCALE	AS NOTED

MSE OF KENTUCKY, INC.
Engineers Architects Planners
624 Wellington Way
Lexington, KY 40503
www.mseltex.com
Phone: (859)223-5694
Fax: (859)223-2607

DRAWING NO.
A-7
SHEET OF

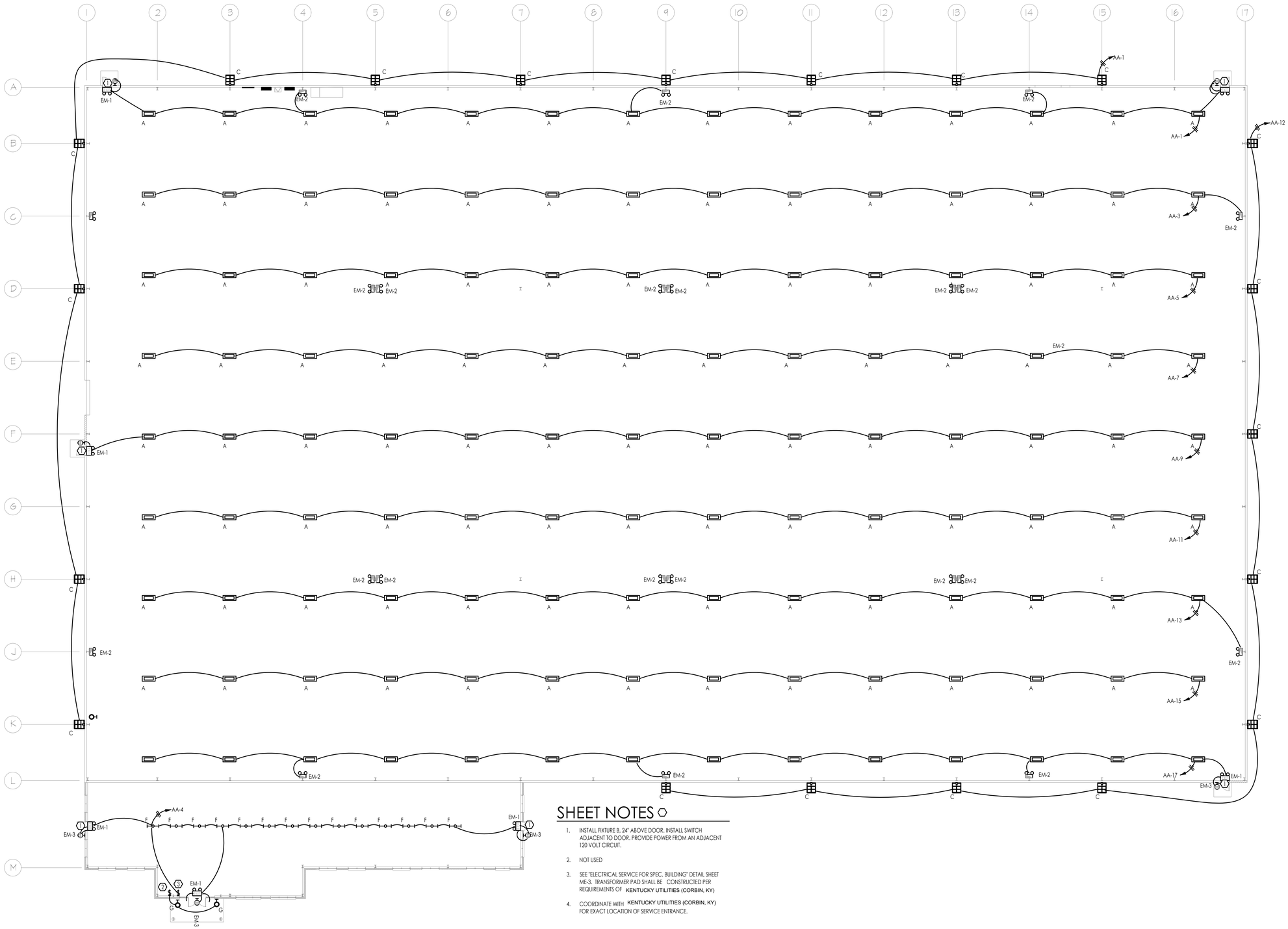

SHEET NOTES

1. INSTALL FIXTURE B, 24" ABOVE DOOR. INSTALL SWITCH ADJACENT TO DOOR. PROVIDE POWER FROM AN ADJACENT 120 VOLT CIRCUIT.
2. NOT USED
3. SEE "ELECTRICAL SERVICE FOR SPEC. BUILDING" DETAIL SHEET ME-3. TRANSFORMER PAD SHALL BE CONSTRUCTED PER REQUIREMENTS OF KENTUCKY UTILITIES (CORBIN, KY)
4. COORDINATE WITH KENTUCKY UTILITIES (CORBIN, KY) FOR EXACT LOCATION OF SERVICE ENTRANCE.

ME-1: LIGHTING PLAN

SCALE: 1/16" = 1'-0"

SOUTHERN KENTUCKY BUSINESS PARK
• WORKING TOGETHER IN SOUTHERN KENTUCKY •
Est. 1989
BELL • CLAY • KNOX • LAUREL • MCCREARY • WHITLEY

ADAMS-FRAZIER-ANDERSON INC.
ARCHITECTS • PLANNERS • ENGINEERING
715 WESTLAND DRIVE
LEXINGTON, KENTUCKY 40505
PHONE (859) 255-4437

SPECULATIVE BUILDING #5
FOR
SOUTHERN KENTUCKY BUSINESS PARK
CORBIN, KENTUCKY

DATE	REVISION	BY

DESIGN DOCUMENTS
The design of these documents waives any and all responsibility and liability for problems which arise from failure to follow these plans, specifications and the design intent they convey.
COPYRIGHT ©
The information and designs contained herein constitutes subject matter considered confidential by MSE of Kentucky, Inc. and on which MSE of Kentucky, Inc. has property rights. Neither receipt nor possession thereof confers or transfer any right to reproduce, use or authorize others to use the information or designs for any purpose, or to disclose the information to others, or to use it for any purpose without the written permission of MSE of Kentucky, Inc.

PROJECT NO.	
DESIGNED BY	
DRAWN BY	
CHECKED BY	
REVIEWED BY	
DATE	
SCALE	

MSE OF KENTUCKY, INC.
Engineers
Architects
Planners
624 Wellington Way
Lexington, KY 40503
www.mseiex.com
Phone: (859)223-5694
Fax: (859)223-2607

STATE OF KENTUCKY
THOMAS B. WILSON, JR.
2017
LICENSED
PROFESSIONAL ENGINEER

DRAWING NO.

ME-1

SHEET OF

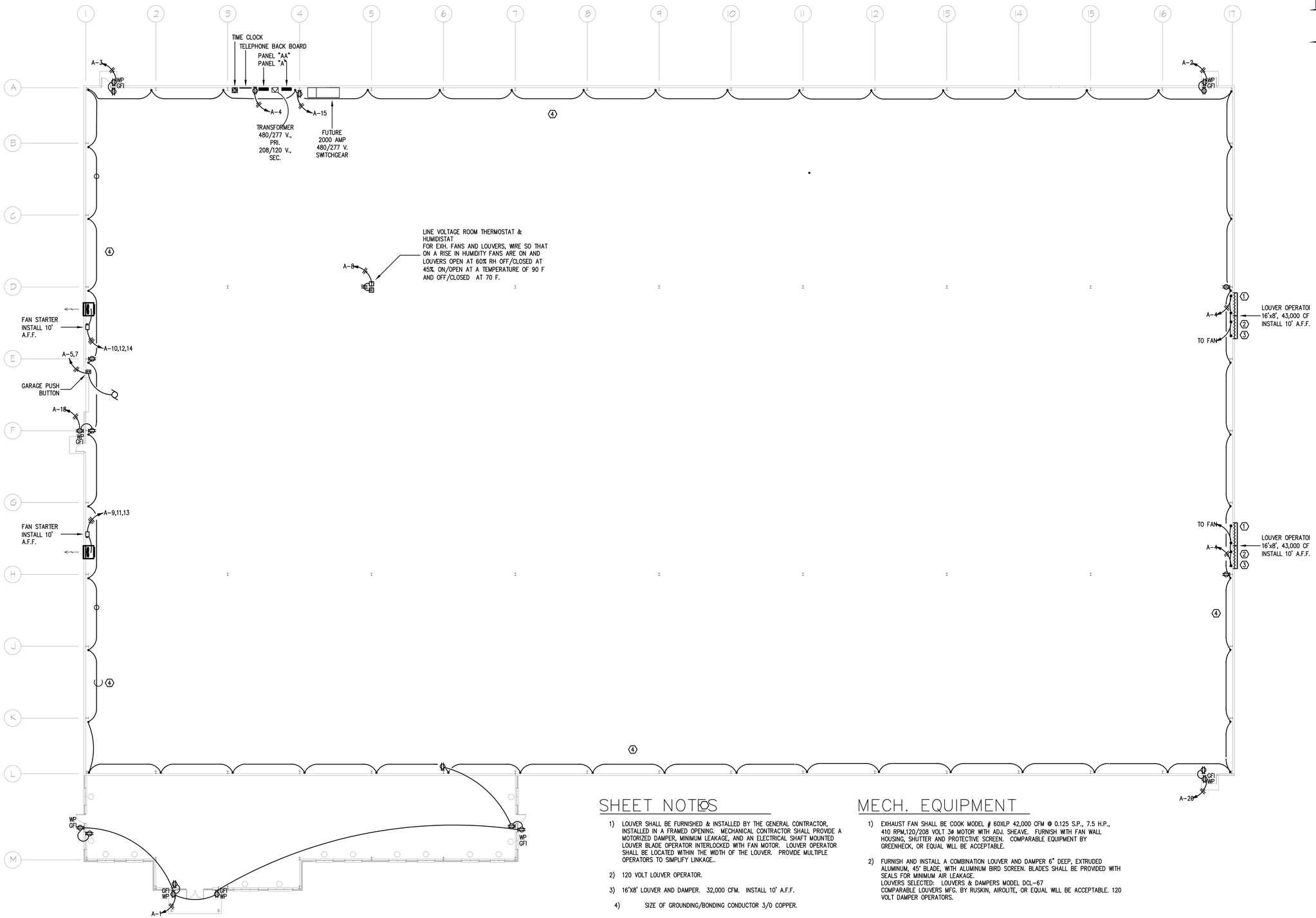

ME-2: POWER AND MECHANICAL PLAN

SCALE: 1/16" = 1'-0"

SHEET NOTES

1) LOUVER SHALL BE FURNISHED & INSTALLED BY THE GENERAL CONTRACTOR, INSTALLED IN A FRAMED OPENING. MECHANICAL CONTRACTOR SHALL PROVIDE A MOTORIZED DAMPER, MINIMUM LEAKAGE, AND AN ELECTRICAL SHAFT MOUNTED LOUVER BLADE OPERATOR INTERLOCKED WITH FAN MOTOR. LOUVER OPERATOR SHALL BE LOCATED WITHIN THE WIDTH OF THE LOUVER. PROVIDE MULTIPLE OPERATORS TO SIMPLIFY LINKAGE..

2) 120 VOLT LOUVER OPERATOR.

3) 16'X8' LOUVER AND DAMPER. 32,000 CFM. INSTALL 10' A.F.F.

4) SIZE OF GROUNDING/BONDING CONDUCTOR 3/0 COPPER.

MECH. EQUIPMENT

1) EXHAUST FAN SHALL BE COOK MODEL # 60XLP 42,000 CFM @ 0.125 S.P., 7.5 H.P., 410 RPM,120/208 VOLT 3ø MOTOR WITH ADJ. SHEAVE. FURNISH WITH FAN WALL HOUSING, SHUTTER AND PROTECTIVE SCREEN. COMPARABLE EQUIPMENT BY GREENHECK, OR EQUAL WILL BE ACCEPTABLE.

2) FURNISH AND INSTALL A COMBINATION LOUVER AND DAMPER 6" DEEP, EXTRUDED ALUMINUM, 45° BLADE, WITH ALUMINUM BIRD SCREEN. BLADES SHALL BE PROVIDED WITH SEALS FOR MINIMUM AIR LEAKAGE.
LOUVERS SELECTED: LOUVERS & DAMPERS MODEL DCL-67
COMPARABLE LOUVERS MFG. BY RUSKIN, AIROLITE, OR EQUAL WILL BE ACCEPTABLE. 120 VOLT DAMPER OPERATORS.

STATE OF KENTUCKY
THOMAS B. WILSON, JR.
2017
LICENSED
PROFESSIONAL ENGINEER

SOUTHERN KENTUCKY BUSINESS PARK
• WORKING TOGETHER IN SOUTHERN KENTUCKY •
Est. 1989
BELL • CLAY • KNOX • LAUREL • MCCREARY • WHITLEY

AFA
ADAMS-FRAZIER-ANDERSON INC.
ARCHITECTS • PLANNERS • ENGINEERING
715 WESTLAND DRIVE
LEXINGTON, KENTUCKY 40505
PHONE (859) 255-4437

SPECULATIVE BUILDING #5
FOR
SOUTHERN KENTUCKY BUSINESS PARK
CORBIN, KENTUCKY

DATE	REVISION	BY

DESIGN DOCUMENTS
The design professional waives any and all responsibility and liability for problems which arise from failure to follow these plans, specifications and the design intent they convey.

COPYRIGHT ©
The information contained herein constitutes subject matter considered confidential by MSE of Kentucky, Inc. and on which MSE of Kentucky, Inc. has property rights. Neither receipt nor possession thereof confers or transfer any rights in or permission to use the information or any product contemplated thereby or to disclose any product contemplated thereby to others, or to use it for any purpose without the written permission of MSE of Kentucky, Inc.

PROJECT NO.
DESIGNED BY
DRAWN BY
CHECKED BY
REVIEWED BY
DATE
SCALE

MSE OF KENTUCKY, INC.
Engineers
Architects
Planners
624 Wellington Way
Lexington, KY 40503
www.mselex.com
Phone: (859)223-5694
Fax: (859)223-2607

DRAWING NO.

ME-2

SHEET OF

PANEL "AA"

VOLTAGE: 480/277 PHASE: 3Ø WIRE: 4 MAINS: 225 MAIN CKT BRKR: 200 A
TYPE: SQUARE D, NQOD MOUNT: SURFACE LOCATION: ELECTRICAL RM AIC: 24,000

CKT#	CB / POLE	WIRE SIZE	LOAD SERVED	KVA	LOAD A	LOAD B	LOAD C	KVA	LOAD SERVED	WIRE SIZE	CB / POLE	CKT#
1	25	10	SHOP LIGHTS	5.2	5.8			0.6	EXTERIOR LIGHTS		20	2
3	25	10	SHOP LIGHTS	5.2		5.8		0.6	OFFICE LIGHTS		20	4
5	25	10	SHOP LIGHTS	5.2			30.2	25				6
7	25	10	SHOP LIGHTS	5.2	30.2			25	75 KW TRANSFORMER	#1	3/120	8
9	25	10	SHOP LIGHTS	5.2		30.2		25				10
11	25	10	SHOP LIGHTS	5.2			5.8	.5	EXTERIOR LIGHTS		-	12
13	25	10	SHOP LIGHTS	5.2	5.2			-	SPACE		-	14
15	25	10	SHOP LIGHTS	5.2		5.2		-	SPACE		-	16
17	25	10	SHOP LIGHTS	5.2			5.2	-	SPACE		-	18
19	20		SPARE	0.0	0.0			0.0	SPARE		20	20
21	20		SPARE	0.0		0.0		0.0	SPARE		20	22
23	20		SPARE	0.0			0.0	0.0	SPARE		20	24
25	20		SPARE	0.0	0.0			0.0	SPARE		20	26
27	20		SPARE	0.0		0.0		0.0	SPARE		20	28
29	20		SPARE	0.0			0.0	0.0	SPARE		20	30
31	20		SPARE	0.0	0.0			0.0	SPARE		20	32
33	20		SPARE	0.0		0.0		0.0	SPARE		20	34
35	-		SPACE	-			0.0	0.0	SPACE		-	36
37	-		SPACE	-	0.0			0.0	SPACE		-	38
39	-		SPACE	-		0.0		0.0	SPACE		-	40
41	-		SPACE	-			0.0	0.0	SPACE		-	42
					43.2	41.2	41.2					

TOTAL CONNECTED 125.6 KVA

INSTALL SURGE PROTCTION, 300KA, USE SADS TYPE 1 SUPPRESSION DEVICE.

PANEL "A"

VOLTAGE: 120/208 PHASE: 3Ø WIRE: 4 MAINS: 225 MAIN CKT BRKR: 200 A
TYPE: SQUARE D, NQOD MOUNT: SURFACE LOCATION: ELECTRICAL RM AIC: 14,000

CKT#	CB / POLE	WIRE SIZE	LOAD SERVED	KVA	LOAD A	LOAD B	LOAD C	KVA	LOAD SERVED	WIRE SIZE	CB / POLE	CKT#
1	20		RECEPTACLES	1.2	1.8			0.6	OUTDOOR RECEPTACLES		20	2
3	20		RECEPTACLES	0.6		1.8		1.2	LOUVER OPERATOR		20	4
5	20/2		GARAGE DOOR OPENER	1.2			2.7	1.5	TIME CLOCK		20	6
7				1.2	2.7			1.5	THERMOSTAT		20	8
9				2.5		5.0		2.5				10
11	25/3		WAREHOUSE FAN	2.5			5.0	2.5	WAREHOUSE FAN		25/3	12
13				2.5	5.0			2.5				14
15	20		PANEL RECEPTACLE	1.5		3.0		1.5	TELEPHONE TERMINAL		20	16
17	20		RECEPTACLES	2.0			4.0	2.0	RECEPTACLES		20	18
19	20		SPARE	-	-			0.0	SPARE		20	20
21	20		SPARE	0.0		0.0		0.0	SPARE		20	22
23	20		SPARE	0.0			0.0	0.0	SPARE		20	24
25	20		SPARE	0.0	0.0			0.0	SPARE		20	26
27	20		SPARE	0.0		0.0		0.0	SPARE		20	28
29	20		SPARE	0.0			0.0	0.0	SPARE		20	30
31	20		SPARE	0.0	0.0			0.0	SPARE		20	32
33	20		SPARE	0.0		0.0		0.0	SPARE		20	34
35	-		SPACE	-			0.0	-	SPARE		-	36
37	-		SPACE	-	0.0			-	SPACE		-	38
39	-		SPACE	-		0.0		-	SPACE		-	40
41	-		SPACE	-			0.0	-	SPACE		-	42
					9.5	9.8	11.7					

TOTAL CONNECTED 31.0 KVA

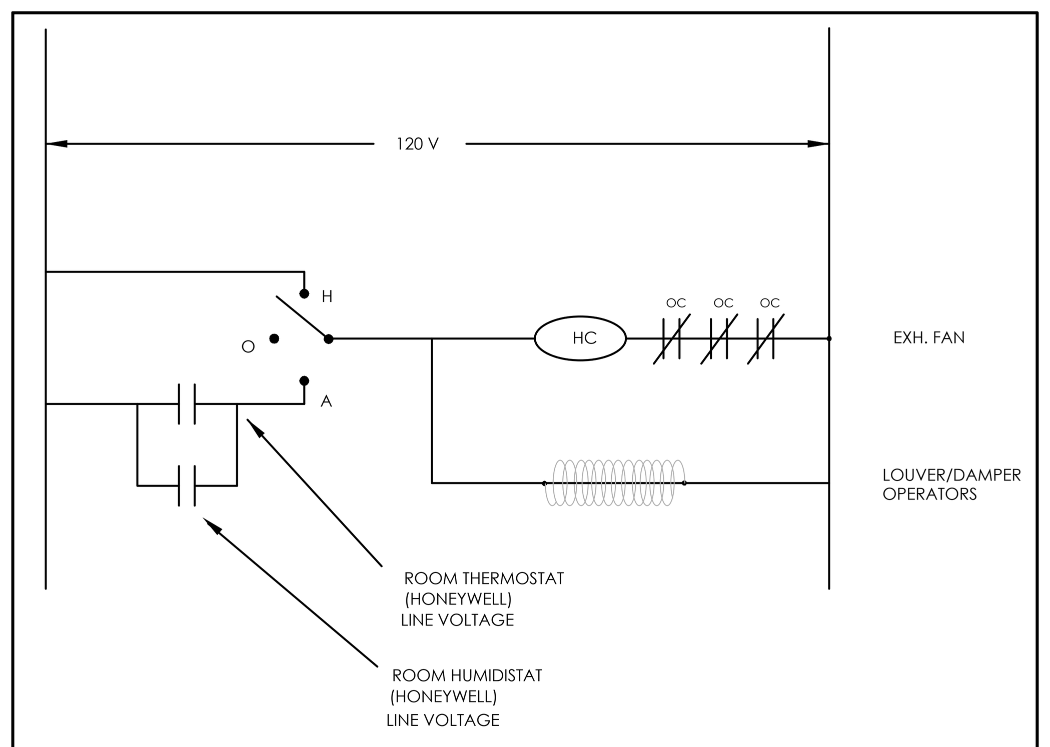

EXHAUST FAN/ LOUVER WIRING DETAIL

ME-3: ELECTRICAL AND MECHANICAL SCHEDULES

SCALE: 1/16" = 1'-0"

GENERAL NOTES

1. MINIMUM STANDARDS FOR ALL ELECTRICAL WORK SHALL BE THE LATEST REVISION OF THE NATIONAL ELECTRICAL CODE (NEC). WHENEVER AND WHEREVER OSHA, FEDERAL AND STATE LAWS, REGULATIONS AND DESIGN CRITERIA REQUIRE HIGHER STANDARDS THAN NEC, THESE LAWS, REGULATIONS, AND DESIGN CRITERIA SHALL BE FOLLOWED.
2. PROVIDE ELECTRICAL INSPECTION BY A LICENSED AND RECOGNIZED ELECTRICAL INSPECTOR. ALL COSTS INCIDENTAL TO ELECTRICAL INSPECTION SHALL BE BORNE BY THE CONTRACTOR. PRIOR TO FINAL ACCEPTANCE OF THE WORK AND RELEASE OF FINAL PAYMENT, DELIVER TO THE ENGINEER THE CERTIFICATE OF FINAL INSPECTION.
3. UNLESS INDICATED OTHERWISE, INSTALL ALL WIRING IN RIGID METAL CONDUIT, ELECTRICAL METALLIC TUBING, OR FLEXIBLE CONDUIT AS SPECIFIED. ALL CONDUIT SHALL BE 3/4" OR LARGER.
4. DO NOT INSTALL ELECTRICAL METALLIC TUBING UNDERGROUND, ON GRADE OR IN WET LOCATIONS, IN HAZARDOUS AREAS, OR FOR CIRCUITS OPERATING AT MORE THAT 600 VOLTS. METALLIC CONDUIT BURIED IN GROUND SHALL BE THREADED, RIGID STEEL CONDUIT ONLY. SCHEDULE 80 PVC MAY BE USED BELOW SLAB ON GRADE PROVIDED THAT ALL RISERS THROUGH THE SLAB ARE MADE WITH RIGID STEEL CONDUIT.
5. UNLESS INDICATED OTHERWISE, PROVIDE NO. 12 AWG THWN OR LARGER FOR ALL BRANCH CIRCUIT CONDUCTORS. ALL CONDUCTORS SHALL BE 98% CONDUCTIVITY COPPER.
6. ALL ELECTRICAL EQUIPMENT SHALL BE UL LISTED FOR THE APPLICATIONS IN WHICH IT IS UTILIZED.
7. ALL CONDUIT SHALL BE INSTALLED CONCEALED EXCEPT IN DESIGNATED MECHANICAL ROOMS OR UNLESS INDICATED OTHERWISE HEREIN. CONDUITS IN SHOP MA BE EXPOSED.
8. A SEPARATE, INSULATED EQUIPMENT GROUND WIRE SHALL BE RUN CONTINUOUS TO ALL EQUIPMENT, LIGHTING FIXTURES AND RECEPTACLES.
9. UNLESS INDICATED OTHERWISE, ALL INTERIOR AND EXTERIOR WIRING DEVICES SHALL BE INSTALLED FLUSH IN WALL. ELECTRICAL BOX LOCATIONS SHOWN ON THE DRAWINGS ARE APPROXIMATE UNLESS DIMENSIONED. ELECTRICAL BOXES IN SHOP MAY BE EXPOSED.
10. ALL EQUIPMENT DISCONNECT SWITCHES, MOTOR STARTERS, PUSHBUTTON STATIONS, PANELBOARDS AND SWITCHBOARDS SHALL BE CLEARLY IDENTIFIED USING ENGRAVED LAMACOID PLATES.
11. UNLESS INDICATED OTHERWISE, LOCATE STARTERS WITHIN SIGHT OF THEIR ASSOCIATED MOTORS. WHERE STARTER IS NOT WITHIN SIGHT OF MOTOR, PROVIDE A DISCONNECT DEVICE WITHIN SIGHT OF THE MOTOR. UNLESS INDICATED OTHERWISE, DISCONNECT DEVICES SHALL BE EITHER AN UNFUSED SWITCH OR NON-AUTOMATIC CIRCUIT BREAKER. SWITCHES SHALL BE UNFUSED AND CIRCUIT BREAKER SWITCHEW SHALL BE WITHOUT OVERCURRENT DEVICES.
12. THE ELECTRICAL CONTRACTOR SHALL PROVIDE ALL POWER WIRING TO ALL MOTORS AND ALL LINE VOLTAGE FEEDERS TO ALL FACTORY CONTROL PANELS FURNISHED UNDER DIVISION 15. THE ELECTRICAL CONTRACTOR SHALL ALSO PROVIDE MOTOR STARTERS (3-PHASE) OR MOTOR RELAYS (SINGLE PHASE) AND DISCONNECTS FOR ALL MECHANICAL EQUIPMENT WHICH HAS NOT BEEN SPECIFIED TO HAVE FACTORY CONTROL PANELS OR FACTORY-MOUNTED MOTOR CONTROLS.
13. IDENTIFY CIRCUITS CONTAINED IN EACH JUNCTION BOX ON EXTERIOR COVER WITH A PERMANENT MARKER, TAG EACH CONDUCTOR INSIDE.
14. CHECK WITH OTHER TRADES ON SCOPE OF THEIR WORK AND COORDINATE ON ALL LOCATIONS OF VARIOUS ITEMS OF EQUIPMENT AND OUTLETS BEFORE THEY ARE FINALLY PLACED AND CONNECTED. RELOCATION OF MATERIAL OR EQUIPMENT NECESSITATED BY FAILURE TO COORDINATE WORK SHALL BE AT NO COST TO THE OWNER.
15. PROVIDE FIRESTOPPING AT ALL FIRE SEPARATION WALLS AND FLOOR PENETRATIONS. REFER TO ARCHITECTURAL PLANS FOR RATED LOCATIONS.
16. BREAKERS FOR BRANCH PANELS SHALL BE MOLDED CASE BOLT-IN TYPE. SINGLE BREAKERS IN BRANCH PANELS SHALL HAVE AN INTERRUPTING CAPACITY OF NOT LESS THAN 10,000 AMPS SYMMETRICAL AT 208/120 VOLTS AND 14,000 AMPS SYMMETRICAL AT 480/277 VOLTS.
17. ALL FUSES SHALL BE CURRENT LIMITING WITH 200,000 AMP. INTERRUPTION CAPACITY. ALL FUSES SHALL BE VOLTAGE RATED FOR THE SYSTEM IN WHICH THEY ARE INSTALLED. MANUFACTURERS: BUSSMAN, GE, GOULD SHAWMUT OR LITTELFUSE.
18. LIGHT FIXTURES SHALL BE LED CONSIST OF,DRIVERS REFLECTORS,
19. SET LIGHTING FIXTURES AND EQUIPMENT PLUMB, SQUARE, AND LEVEL AND SECURE TO STRUCTURAL SUPPORT MEMBERS OF THE BUILDING. RECESSED AND SEMI-RECESSED FIXTURES SHALL BE SUPPORTED INDEPENDENT OF SUSPENDED CEILING SYSTEM.
20. BASE GROUND WIRE NO. 3/0 BARE COPPER BONDED TO EACH COLUMN AS SHOWN. TYPICAL.
21. ELECTRICAL CONTRACTOR SHALL PROVIDE AND INSTALL ALL NECESSARY CONTROL WIRING TO DOOR OPENER AND SHALL MOUNT OPERATORS STATION AS REQUIRED.
22. ATTACH GROUND WIRE TO GROUND LUGS OF INCOMING SERVICE PANEL AA.
23. CONCRETE HOUSEKEEPING PAD FOR FUTURE 2000 AMP SWITCHGEAR AND DISTRIBUTION SECTION. PAD DIMENSIONS SHALL BE 16'-6"X3'-7"X"10".
24. 75 KVA, 480-120/208 THREE PHASE TRANSFORMER. TRAPEZE MOUNT AT 10'-0" A.F.F.
25 LOUVER SHALL BE FURNISHED & INSTALLED BY THE GENERAL CONTRACTOR, INSTALLED IN A FRAMED OPENING. MECHANICAL CONTRACTOR SHALL PROVIDE A MOTORIZED DAMPER, MINIMUM LEAKAGE, AND AN ELECTRICAL SHAFT MOUNTED LOUVER BLADE OPERATOR INTERLOCKED WITH FAN MOTOR. LOUVER OPERATOR SHALL BE LOCATED WITHIN THE WIDTH OF THE LOUVER. PROVIDE MULTIPLE OPERATORS TO SIMPLIFY LINKAGE.
26. OPENING THROUGH WALL FOR FAN SHALL BE FRAMED WITH STEEL STRUCTURAL MEMBERS APPROVED BY THE ARCHITECT. PROVIDE FLASHING AROUND WALL BOX FOR WEATHERPROOF INSTALLATION.
27. 16'X8' LOUVER AND DAMPER. 32,000 CFM. INSTALL 10' A.F.F.
28.. 4'X4' PLYWOOD TELEPHONE BACKBOARD.

SOUTHERN KENTUCKY BUSINESS PARK
• WORKING TOGETHER IN SOUTHERN KENTUCKY •
Est. 1999
BELL • CLAY • KNOX • LAUREL • MCCREARY • WHITLEY

ELECTRICAL LEGEND

A-1	HOMERUN TO PANEL AND CIRCUIT NUMBER"A-1" INDICATES PANEL "A", CIRCUIT #1
A-1,3,5	3 PHASE HOMERUN TO PANEL AND CKT # "A-1,3,5" = PANEL "A", CIRCUITS #1,3,5
	CIRCUIT, CONDUIT OR WIRING
	CONDUIT BELOW FLOOR
	0-10V DIMMING WIRING (PURPLE/GRAY)
	CONDUIT TURNED: UP, DOWN
	CAPPED CONDUIT/WIRE
J	JUNCTION BOX
	DISCONNECT SWITCH
$	LIGHT SWITCH
$ DIM	DIMMING LIGHT SWITCH (LINE VOLTAGE)
$ 0-10V	DIMMING LIGHT SWITCH (0-10V)
$ OS	OCCUPANCY SENSOR TYPE SWITCH
	DUPLEX RECEPTACLE
USB	RECEPTACLE WITH USB
	QUAD RECEPTACLE
	30A/2P, OR 40A/2P RECEPTACLE FOR DRYER OR RANGE AS NOTED
	EQUIPMENT SPECIFIC OUTLET
	ELECTRICAL PANEL
	MOTOR OR EQUIPMENT
1	REFERENCE NUMBER TO SHEET NOTE.
	VOICE / DATA ROUGH-IN
GFI	GROUND-FAULT INTERRUPTER

LIGHTING FIXTURE SCHEDULE

TYPE	MANUFACTURER & MODEL #	DESCRIPTION	LAMPS	WATTS
A	MAXLITE HL3-270UF-CSCR MOUNT 25' AFF	277/480 VOLT, ULTRABAY HIGH-BAY , LED HIGH BAY, 270 WATTS, 40,500 LUMENS, 153 LPW, 4,000K COLOR TEMPERATURE, INCLUDE 5 FT. CABLE HANGERS. 2.5 KV SURGE PROTECTION, 10 YEAR WARRANTY,	LED	270 W
B	MAXLITE SECS30VWCSBPC MOUNT 2' ABOVE DOOR	LED DOOR PACK, SLIM PROFILE SECURITY LIGHT, 4000K 120/277 VOLT	LED	30 W
C	MAXLITE WCOP120U-WCSPC MOUNT 25' AFF	WALL PACK, 120 WATT, 17,500 LUMEN, 4,000K COLOR TEMPERATURE, WITH PHOTOVOLTAIC SWITCH.	LED	120
F	MAXLITE LS24U23WCSCR, MLCHKLS15 HANGERS MOUNT 8' AFF	LINEAR 48", 120/277 VOLT, 4000 K, 15' CABLE KIT LOOP X TOGGLE, 2 PER FIXTURE.	LED	46 W
G	WESTGATE LDSXL-MCT-DD-ORB MOUNT AS SHOWN ON ARCHITECTURAL PLANS	WALL SCONCE 4,000K COLOR TEMPERATURE, SEE ARCHITECTURAL ELEVATIONS FOR MOUNTING HEIGHT. 120 VOLT, 1800 LUMENS, IP 65, 120 DEGREE BEAM ANGLE,	LED	25 W
EM-1 EXIT	MaxLite EXC-RWRC MOUNT 12" ABOVE DOOR	LED EXIT LIGHT, WITH RED LETTERING, THERMOPLASTIC WHITE HOUSING, TWO LIGHT HEADS, UP TO TWO REMOTE HEADS, 120/277 VOLT, BATTERY BACK UP.	LED	N/A
EM-2	MaxLite EML-2HSQW MOUNT 12: AAF	120/277 VOLT HIGH IMPACT THERMOPLASTIC, HIGH CAPACITY 5VA, 90 MINUTE BATTERY, TWO ADJUSTABLE HEADS.	LED	N/A
EM-3	MAXLITE EXC RWRC, SINGLE HEAD FOR USE WITH EM-1 MOUNT LEVEL WITH TOP OF DOOR	LED REMOTE EGRESS HEAD. FOR OUTDOOR MOUNTING.	LED	2 W
			LED	N/A

SUBSTITUTIONS OF OTHER LIGHTING FIXTURES IS NOT TO BE CONSIDERED..

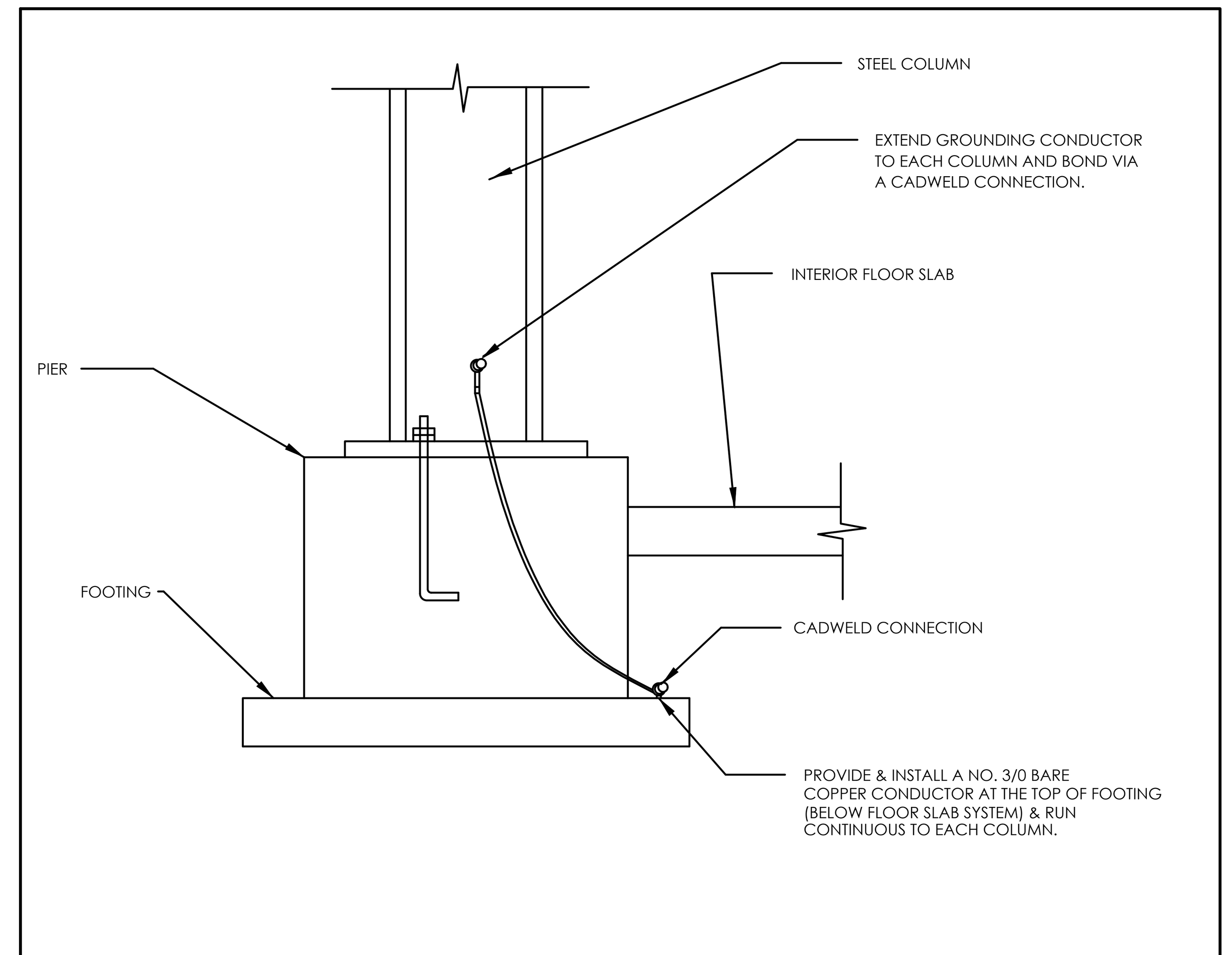

GROUNDING DETAIL AT COLUMNS

NTS

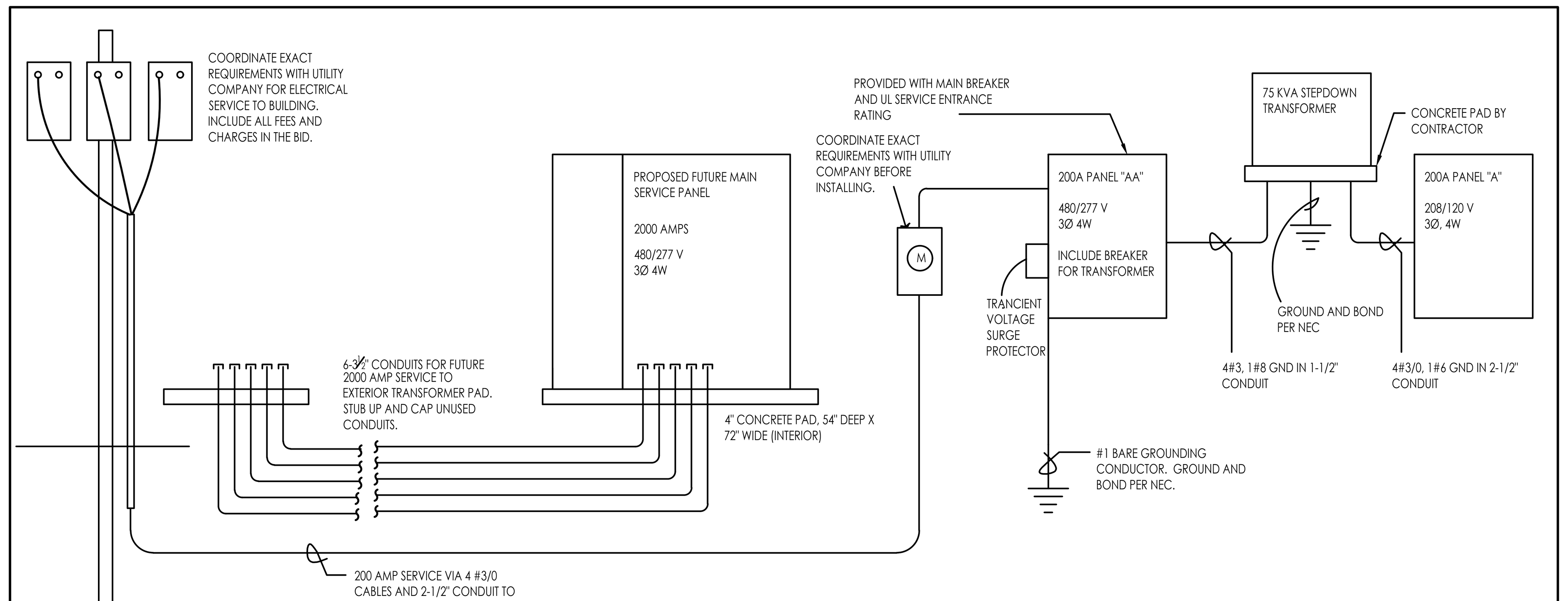

ELECTRICAL SERVICE FOR SPEC BUILDING

NTS

ADAMS-FRAZIER-ANDERSON INC.
CONSULTING ENGINEERING
HVAC – PLUMBING – ELECTRICAL
715 WESTLAND DRIVE
LEXINGTON, KENTUCKY 40504
PHONE (859) 255-4437

SPECULATIVE BUILDING #5
FOR
SOUTHERN KENTUCKY
BUSINESS PARK
CORBIN, KENTUCKY

DATE	REVISION	BY

DESIGN DOCUMENTS:
The design professional waves any and all responsibility and liability for problems which arise from failure to follow these plans, specifications and the design intent they convey.
COPYRIGHT ©
This document discloses subject matter considered confidential by MSE of Kentucky, Inc. and on which MSE of Kentucky, Inc. has property rights. Neither receipt nor possession thereof confers or transfer any rights to reproduce the document or any part thereof, or to disclose any information contained therein to others, or to use it for any purpose without the written permission of MSE of Kentucky, Inc.

PROJECT NO.
DESIGNED BY
DRAWN BY
CHECKED BY
REVIEWED BY
DATE
SCALE

MSE OF KENTUCKY, INC.
Engineers Architects Planners
624 Wellington Way
Lexington, KY 40503
www.mselex.com
Phone: (859)223-5694
Fax: (859)223-2607

STATE OF KENTUCKY
THOMAS B. WILSON JR.
LICENSED PROFESSIONAL ENGINEER

DRAWING NO.
ME-3
SHEET OF